CELLAR COOLER RANGE
TECHNICAL MANUAL

JCC2
CELLAR AND PRODUCT COOLERS

ISSUE: 01.01.2020

CE

J&E Hall International

Contents

Nomenclature

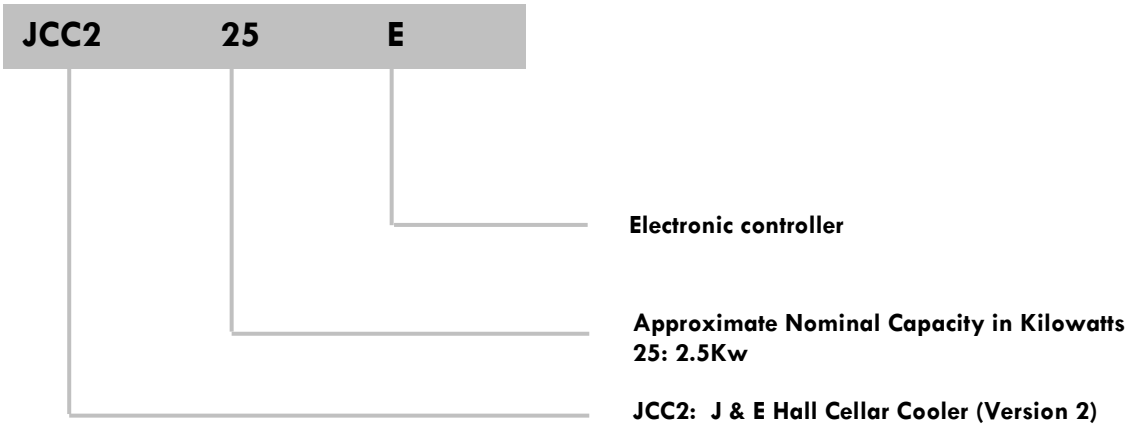

Standard product configuration

- Brewery specification 6 fins per inch evaporator coil
- Galvanised mild steel casing with polyester powder coating
- Electronic controller
- Refrigerant R410A
- Low pressure safety switch
- Rotary type compressor
- Acoustic insulation on outdoor unit and compressor
- 3/4" BSP drain fitting on indoor unit
- Can operate down to +4°C and up to +16°C
- Suitable for cooling beers, wines, flowers, fruit & vegetables etc.
- Suitable for pipe runs up to 25 metres

Specifications

Capacity data

System Indoor + Outdoor	Cooling capacities in kW at 32°C ambient temperature							
	4°C (1)	6°C	8°C	10°C	12°C	**12.7°C**	14°C	16°C
JCC2 25E + J5LC15C (2)	2.70	2.74	2.78	2.82	2.86	**2.87**	2.90	2.94
JCC2 25E + J5LC15FV1	2.36	2.48	2.60	2.74	2.83	**2.86**	2.95	3.06
JCC2 40E + J5LC20C (2)	3.78	3.90	4.02	4.14	4.27	**4.31**	4.40	4.53
JCC2 40E + J5LC20CV1	3.70	3.83	3.96	4.09	4.22	**4.27**	4.36	4.53
JCC2 50E + J5LC25C (2)	4.19	4.32	4.45	4.59	4.73	**4.78**	4.87	5.02
JCC2 50E + J5LC25CV1	4.47	4.53	4.59	4.65	4.71	**4.74**	4.78	4.84
JCC2 60E + J5LC28C (2)	5.29	5.41	5.53	5.65	5.71	**5.82**	5.90	6.03
JCC2 60E + J5LC28CV1	5.34	5.47	5.61	5.72	5.89	**5.96**	6.03	6.17

Notes:

(1) Room temperature of +4 ºC is only available with pipe lengths less than 15metres

(2) Existing outdoor unit models will be phased out during 2020 and replaced with the corresponding outdoor unit models ending in V1.

System data

Unit Model	Cooling Capacity kW (2)	System Pipe Sizes		Maximum Pipe Run (3)		Unit Airflows	Indoor Airthrow (4)	Noise Levels (1)	Precharge R410A		Additional charge, for pipe length exceed 7.6m but less than max. pipe run
		Liquid	Suction	Length	Rise	m³/h	m	dB(A)	kg	TCO_2	g/m
JCC2 25E	2.87	1/4"	1/2"	25m	5m	2560	8	48	n/a	n/a	n/a
J5LC15C (6)						1631	n/a	29	0.83	1.73	10
JCC2 25E	2.86	1/4"	1/2"	25m	5m	2560	8	48	n/a	n/a	n/a
J5LC15FV1						1573	n/a	27	0.57	1.19	18
JCC2 40E	4.31	1/4"	1/2"	25m	8m	2270	8	48	n/a	n/a	n/a
J5LC20C (6)						2208	n/a	29	1.38	2.88	15
JCC2 40E	4.27	1/4"	1/2"	25m	8m	2270	8	48	n/a	n/a	n/a
J5LC20CV1						2225	n/a	32	1.45	3.03	19
JCC2 50E	4.78	1/4"	5/8"	25m	8m	2680	8	47	n/a	n/a	n/a
J5LC25C (6)						2480	n/a	32	1.54	3.21	15
JCC2 50E	4.74	1/4"	5/8"	25m	8m	2680	8	47	n/a	n/a	n/a
J5LC25CV1						2480	n/a	32	1.54	3.21	21
JCC2 60E	5.82	3/8"	5/8"	25m	8m	2560	8	47	n/a	n/a	n/a
J5LC28C (6)						2463	n/a	34	1.8	3.76	20
JCC2 60E	5.96	3/8"	5/8"	25m	8m	2560	8	47	n/a	n/a	n/a
J5LC28CV1						2984	n/a	33	1.8	3.76	28

Notes:

(1) Noise levels are sound pressure levels @ 10m free field

(2) Cooling capacities are nominal duties @ 12.7°C db / 10°C wb & 32°C ambient

(3) The pipe length must include the rise - the rise is not additional to the length

(4) Indoor unit air throw distance is based on final air velocity of 0.4m/s.

(5) For piping exceed 15m, fan speed controller is recommended to be installed in outdoor unit.

(6) Existing outdoor unit models will be phased out during 2020 and replaced with the corresponding outdoor unit models ending in V1.

Important

For applications where the system pipe run **exceeds 15m** up to the maximum of 25m, the following guidelines must be followed:

- A condenser fan speed controller (not supplied as standard) should be fitted. See page 23 for details.
- The maximum indoor room temperature is restricted to +6°C.

Specifications

Unit dimensions & weights

Model	Unit Dimensions (mm)			Fixing Centres (mm)		Unit Weights	Packing Weights
	Width (2)	Depth	Height	Width	Depth	Kg	Kg
JCC2 25E	865	372 (1)	489	745	n/a	31	37
J5LC15C (3)	700	250	541	441	278	30	31
JCC2 25E	865	372 (1)	489	745	n/a	31	37
J5LC15FV1	658	273	550	470	299	26	28
JCC2 40E	865	372 (1)	489	745	n/a	33	39
J5LC20C (3)	855	328	651	603	362	47	49
JCC2 40E	865	372 (1)	489	745	n/a	33	39
J5LC20CV1	855	328	651	603	362	47	49
JCC2 50E	904	370 (1)	546	824	n/a	36	43
J5LC25C (3)	855	328	753	603	362	50	54
JCC2 50E	904	370 (1)	546	824	n/a	36	43
J5LC25CV1	855	328	753	603	362	50	54
JCC2 60E	904	370 (1)	546	824	n/a	38	45
J5LC28C (3)	855	328	753	603	362	57	60
JCC2 60E	904	370 (1)	546	824	n/a	38	45
J5LC28CV1	855	328	753	603	362	57	60

Notes:

(1) Unit depth does not include fan motor depth - add 120mm

(2) Unit width does not include pipe services - add approximately 70mm

(3) Existing outdoor unit models will be phased out during 2020 and replaced with the corresponding outdoor unit models ending in V1.

Electrical data & requirements

Unit Model	Outdoor Unit				Indoor Unit		Power Supply	Mains Power To	Interconnecting Cable	Suggested Fuse Rating
	Compressor		Condenser Fan		Evaporator Fan					
	LRA (1)	RRC (2)	Watts	RRC (2)	Watts	RRC	V/Ph/Hz			Amps
JCC2 25E	n/a	n/a	n/a	n/a	230	0.99	230/1/50	Indoor	3 Core x2.5mm^2	16
J5LC15C (3)	24	5.4	59	0.26	n/a	n/a				
JCC2 25E	n/a	n/a	n/a	n/a	230	0.99	230/1/50	Indoor	3 Core x2.5mm^2	16
J5LC15FV1	24.5	4.08	50	0.22	n/a	n/a				
JCC2 40E	n/a	n/a	n/a	n/a	244	1.02	230/1/50	Indoor	3 Core x2.5mm^2	20
J5LC20C (3)	32	6.1	81	0.36	n/a	n/a				
JCC2 40E	n/a	n/a	n/a	n/a	244	1.02	230/1/50	Indoor	3 Core x2.5mm^2	20
J5LC20CV1	32	5.74	81	0.36	n/a	n/a				
JCC2 50E	n/a	n/a	n/a	n/a	230	0.99	230/1/50	Indoor	3 Core x2.5mm^2	25
J5LC25C (3)	32.3	7.2	100	0.43	n/a	n/a				
JCC2 50E	n/a	n/a	n/a	n/a	230	0.99	230/1/50	Indoor	3 Core x2.5mm^2	25
J5LC25CV1	32.3	6.77	100	0.43	n/a	n/a				
JCC2 60E	n/a	n/a	n/a	n/a	244	1.02	230/1/50	Indoor	3 Core x4.0mm^2	32
J5LC28C (3)	63	12.3	124	0.55	n/a	n/a				
JCC2 60E	n/a	n/a	n/a	n/a	244	1.02	230/1/50	Indoor	3 Core x4.0mm^2	32
J5LC28CV1	63	11.75	124	0.55	n/a	n/a				

Notes:

(1) LRA : Locked Rotor Amps

(2) RRC : Rated Running Current at nominal duties @ 12.7°C db / 10°C wb & 32°C ambient

(3) Existing outdoor unit models will be phased out during 2020 and replaced with the corresponding outdoor unit models ending in V1.

Health and Safety

Important Note:

Only a qualified refrigeration engineer, who is familiar with refrigeration systems and components including all controls, should perform the installation and start-up of the system. To avoid potential injury, use care when working around coil surfaces or sharp edges of metal cabinets. All piping and electrical wiring should be installed in accordance with all applicable codes, ordinances and local by-laws.

General information

Before Installation

- Ensure the units received are the correct models for the intended application.
- Ensure the refrigerant, voltage and MWP are all suitable for the proposed application.
- Check there is no damage to the units. Any damage should be advised to the supplier immediately.
- Check that the proposed equipment locations are suitable and provide adequate support for the weight of the units.

During Installation and subsequent maintenance

- Installation and maintenance are to be performed only by qualified personnel who are familiar with local codes and regulations, and experienced with this type of equipment.
- If lifting equipment is required, ensure that it is suitable for purpose, certificated and that the operatives are qualified to use it.
- Safe working methods are identified and operatives have suitable PPE.
- Ensure the working area has adequate ventilation during brazing procedures.
- The units contain moving machinery and electrical power hazards, which may cause severe injury or death. Disconnect and shut off power before installation or service of the equipment.
- Refrigerant release into the atmosphere is illegal. Proper evacuation, recovery, handling and leak testing procedures must be observed at all times.
- Units must be earthed and no maintenance work should be attempted prior to disconnecting the electrical supply.
- The electrical covers and fan guards must remain fitted at all times.
- Use of the units outside of the design conditions and the application for which the units were intended may be unsafe and be detrimental to the units, regardless of short or long term operation.
- The units are not designed to withstand loads or stresses from other equipment or personnel. Such extraneous loads or stress may cause failure/leak/injury.

Installation

Unit location

- In order to achieve maximum cooling capacity, the installation location for the condensing unit should be carefully selected.
- Install the condensing unit in such a way so that hot air ejected by the condensing unit cannot be drawn in again (short circuit of hot discharge air). Allow sufficient space for maintenance around the unit.

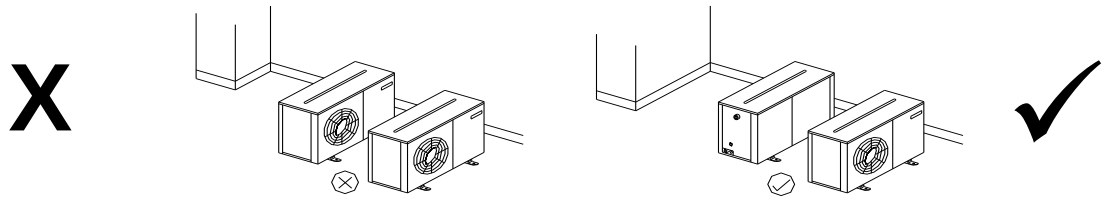

- Ensure that there is no obstruction to air flow into or out of the unit. Remove obstacles which block air intake or discharge.

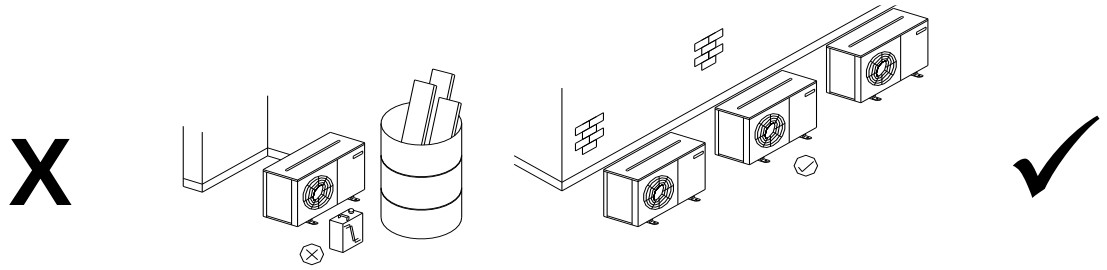

- The location must be well ventilated, so the unit can draw in and distribute plenty of air thus lowering the condensing temperature.
- To optimize the unit running conditions, the condenser coil must be cleaned at regular intervals.

The indoor units can be mounted directly to a wall or to the ceiling utilizing the fixing holes on the rear of the unit or on the top of the unit. No additional brackets are required. Position the indoor unit where the optimum airflow can be achieved. Avoid locating in corners or in alcoves which may restrict airflows. A minimum 10mm rawlbolt type fixing is required with a large steel washer to bear the unit weight. **It is important to ensure that the wall/ceiling is able to withstand the unit weight and that all fixings are secure.**

Both indoor and outdoor units must be level in all directions.

Installation

Installation clearances

- The installation location should allow sufficient space for air flow and maintenance around the units:

Outdoor

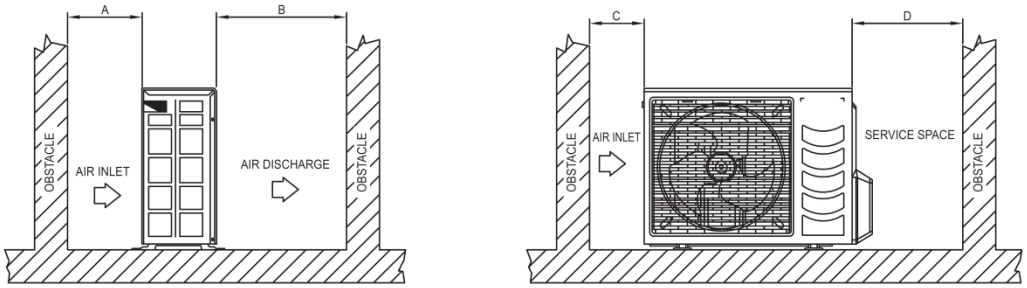

ALL MODELS	A	B	C	D
Minimum Distance	300 mm	1000 mm	300 mm	500 mm

Indoor

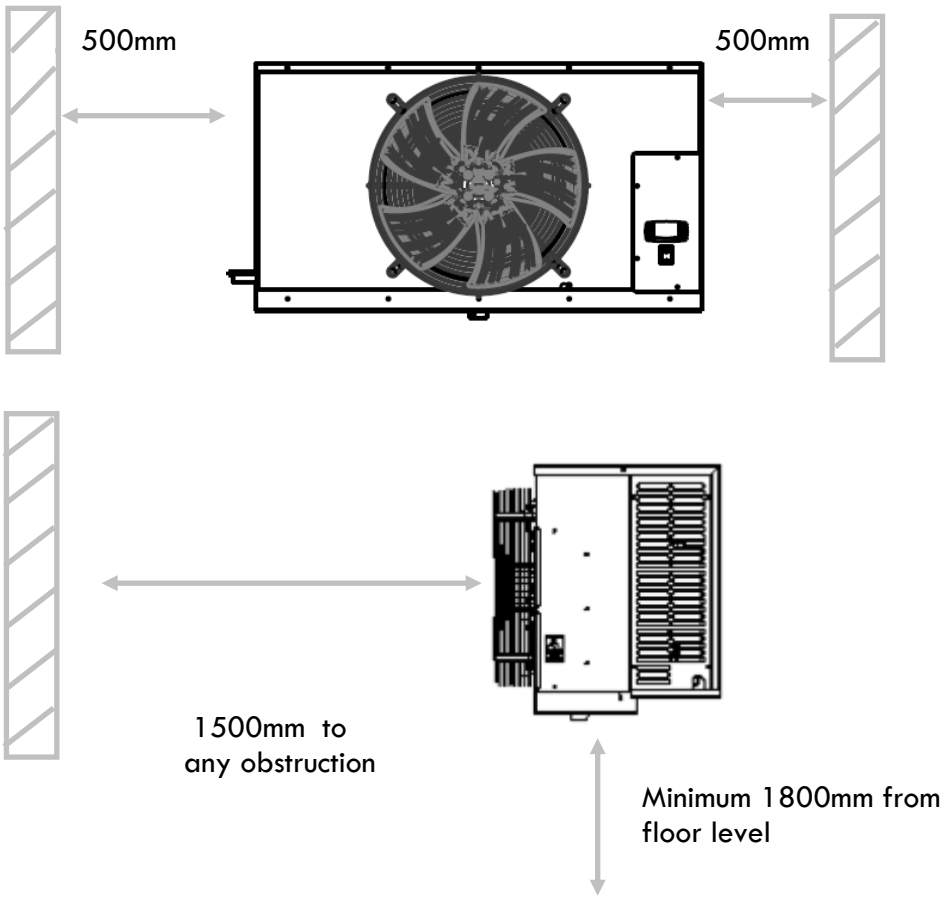

Installation

Field piping

Important Note:

Pipe sizes and maximum lengths/heights should be strictly as per the information given on page 4. All local codes of practice must be observed in the installation of refrigerant piping

To ensure satisfactory operation and performance, the following points should be noted for field piping arrangements:

- Pipework routes must be as simple and as short as possible.
- Avoid low points on pipework where oil can accumulate.
- Use only clean, dehydrated refrigeration grade copper tube with long radius bends.
- When brazing use only silver alloy rods.
- Run braze without over filling to ensure there is no leakage into the tube.
- To prevent oxidization, blow oxygen free nitrogen through pipework when brazing.
- Protect the casing of the unit when brazing connections.
- Install insulation with a minimum wall thickness of 3/8" on both liquid and suction lines.
- Adequately support all pipe work at a maximum of 2 metre intervals.

Use of incorrect pipe sizes can affect system pressures/temperatures and gas velocity for proper oil return.

Important Note:

One of the main factors affecting equipment reliability and compressor service life is refrigeration circuit contamination. During installation, circuit contamination can be caused by:

- Brazing & Welding Oxides
- Filings & Particles from de-burring pipework
- Brazing Flux
- Moisture & Air

Installation

Pressure testing

Both the indoor and outdoor units have been pressure tested in the factory prior to dispatch. The indoor unit contains a holding charge of oxygen free nitrogen. The outdoor unit contains a charge of R410A refrigerant.

> Important Note:
>
> Do not open the service valves on the condensing unit until pressure testing and evacuation procedures have been carried out.

Once the pipework installation is complete, it should be pressure tested prior to evacuation to test for leaks.
A pressure leak test should be carried out using oxygen free nitrogen (OFN). NEVER USE OXYGEN FOR PRESSURE TESTING SYSTEMS. A calibrated nitrogen pressure regulator must always be used. Before starting any pressure testing, ensure the area surrounding the system is safe, inform relevant personnel and fit warning signs indicating high pressure testing. Also, use correct PPE as required.

A simple procedure for testing is as follows:

- Connect a pressure hose from the regulator to the schrader connection on the service port on the condensing unit.
- Pressure system slowly up to 3 bar (45 psi) for 5 minutes and check for any signs of leakage.
- Increase pressure slowly up to 10 bar (150 psi) for 5 minutes and check for any signs of leakage.
- Increase pressure slowly up to 20 bar (300 psi) and check for any signs of leakage. Leave system under pressure for 24 hours.

Listen for any possible leaks and check all joints with bubble spray. If any leaks are discovered, release pressure slowly from system until empty, repair leak and then restart pressure testing procedure. Never attempt to repair a leak on a pressurized system.
A strength test should also be incorporated according to local regulations.
Once testing has been completed satisfactorily, release the pressure from the system gradually and safely to external atmosphere.

Installation

Evacuation & Charging

Important Note:

Moisture prevents proper functioning of the compressor and the refrigeration system. Ensure that a good quality vacuum pump is used to pull a minimum vacuum of 250 microns (0.25 torr).

Once pressure testing has been completed, the system can now be evacuated to remove air and any moisture from the piping. This can be done as follows:

- Ensure any nitrogen charge is safely released from the system.
- Connect a gauge manifold to the schrader connection on the service valve on the condensing unit.
- Connect a vacuum pump and vacuum gauge to the system.
- Evacuate the system until vacuum is below 250 microns (0.25 torr).

Note: A triple evacuation procedure is recommended for all new systems or where moisture is suspected.

Once the system is isolated and the vacuum pump is switched off, any rise in pressure indicates that either there may be a leak in the system or moisture is still present. In this case, recheck the system for leaks, repair as necessary, and then restart the evacuation procedure. Once completed satisfactorily, the vacuum pump and vacuum gauge can be removed.

At this point, any additional refrigerant charge can be added to the system as required. Additional refrigerant must be charged in the liquid phase. Use calibrated weighing scales to add the correct amount.
With the gauge manifold connected and closed, slowly open both of the service ports fully on the condensing unit. This will release the refrigerant charge from the condensing unit into the system.

Systems are pre-charged with refrigerant for pipe runs up to 7.6 metres

Installation

Drainage

Important Note:

The evaporator drain pan fitting is supplied loose and must be fitted on site. It is attached to the indoor unit fan guard with a cable tie. Correct fitting is vital to ensure leak – free operation. The lock nut and the aluminium washer on the drain fitting **must** be fitted the right way around; otherwise it will not tighten against the drip tray. One side of the nut has an angled recess – this must be facing towards the drip tray. The fitting does not require any sealant but a small amount of silicon sealant can be applied between the flared face of the fitting and the drip tray if so desired. The instruction manual is put together with the aluminium washer, drain fitting and locknut in the plastic bag inside the carton box.

The drain fitting is aluminum alloy with a 3/4" BSP male thread. A locknut and an aluminium washer are supplied to secure to the drain pan. The locknut only requires hand tightening and then pinching up with a spanner. Do not over tighten or the threads may strip from the nut and also damage the tray. To fit the drain fitting, remove the drip tray (unscrew the seven screws that secure it), locate the fitting then refit the tray. The correct way to fit the drain fitting to the drain pan with aluminium washer and locknut can be seen in the diagram below.

A minimum suggested size of drain from the indoor unit is 20mm or 3/4". This can be either copper or plastic. Flexible hose is not recommended as it can easily kink causing a blockage and water to back up in the unit.

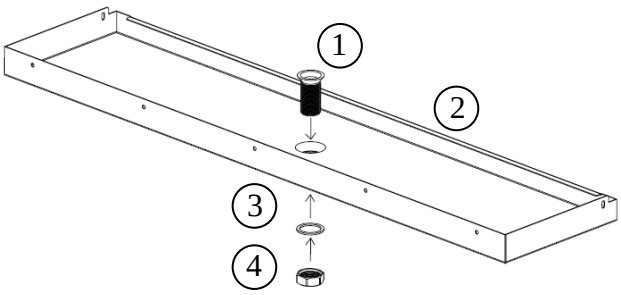

1 DRAIN FITTING

2 DRAIN PAN

3 ALUMINIUM WASHER

4 LOCKNUT

Installation

Electrical

Important Note:

The mains electrical supply to the indoor unit must be via a suitably rated isolator and motor rated circuit breaker or fuse. There is no isolator fitted to either the indoor or the outdoor unit. The rocker switch on the front of the indoor unit is for isolating the indoor fan and electronic controller only.

J & E Hall JCC cellar systems require a 230 volt / 1 phase / 50Hz supply which must include a Neutral and Earth. They are not suitable for any other supply voltages (other than a deviation of +/- 10% of the above values) and are not suitable for 60 Hz supplies.

Cable type and sizing must be selected for the particular application and the electrical installation should conform to the current local standards. All indoor and outdoor units are Single Phase.

- Cables to the indoor unit should be routed through the 'U' shaped cut-out in the bottom of the removable air grille at the side of the unit and into the rear of the electric box.
- Cables to the outdoor unit should be routed under the plastic pipe / electrical connection cover on the end of the unit.
- The interconnecting cable between the indoor and outdoor unit should be 3 core (2 core + E).
- Connect the mains supply and interconnecting cables as per the wiring diagrams on page 20.

Access to the electrical terminals and components on the indoor unit is via the removable cover plate on the front of the unit. Removal of the cover plate gives access to the outdoor unit contactor, the terminal block as well as the electronic controller and rocker switch connections.

Installation

Commissioning

Important Note:

Before starting the system, ensure that all electrical connections are correctly made and tight, service ports are in the correct position and all covers and guards are fitted.

Switch on the power at the mains isolator and then switch on the rocker switch on the front of the indoor unit. Set the required operating temperature on the electronic controller and check the system parameters in the controller are as required (the controllers are pre-programmed in the factory to suggested settings).

Run the system to the required temperature and check system pressures, gas charge and running currents of motors to ensure correct operation.

Carry out a manual defrost (press the defrost button on the controller for more than 2 seconds) to ensure the defrost period is adequate to clear any frost build up on the evaporator coil.

Carry out final leak test and ensure all covers are fitted and securing screws are tightened.

Log all information along with system model and serial numbers for future reference.

Ensure that the customer / responsible person is provided with basic operating instructions and where electrical isolators are situated in case of emergency.

Important Note:

An anti short-cycle timer is built into the controller to prevent the compressor from stop/starting too quickly, which can result in the compressor tripping on its internal overload. If the overload trips, please allow time for it to reset before restarting.

Service & Maintenance

Important Note:

Warning! – Disconnect the mains electrical supply before servicing or opening the units.

The units are designed to give long life operation with minimum maintenance. However, they should be routinely checked and the following service schedule is recommended under normal circumstances:

1. Indoor and Outdoor units – Inspect at regular intervals

- Check for refrigerant leaks on all joints and fittings.
- Check mountings for tightness and wear.
- Inspect pipework for any damage.
- Check all electrical connections.
- Ensure that no abnormal noise or vibration is detected during test run.

2. Condenser & Evaporator Fan Motors & Blades – Clean and inspect at regular intervals

- Check for abnormal noise, vibration and fan imbalance.
- Ensure that the fan motors are clean and spin freely.
- Check that the fan blades are clean and free from restriction and damage/imbalance.
- **Note:** The Fan Motors are pre-lubricated and factory sealed so no maintenance is necessary.

3. Condenser & Evaporator Coils – Clean and inspect at regular intervals

- Check and remove the dirt and debris between the fins using a soft brush and/or a suitable chemical coil cleaner then rinse with clean water.
- Check and remove any obstacles that may hinder the airflow through the coils.
- Repair any damage to fins and ensure any guards are fitted correctly.
- DO NOT USE HIGH PRESSURE WASHERS ON COILS – THEY DAMAGE THE FINS.

4. Controls

- Check controller settings and operation.
- Check calibration of temperature probe reading.

5. Power Supply – Inspect at regular intervals.

- Check the running current and voltage for the units.
- Check the electrical wiring and tighten the wires onto the terminal blocks if necessary.

6. Refrigerant Charge

- Check the refrigerant charge by ensuring that the system is operating correctly and the system pressures are as expected.
- Carry out a full leak test.

7. Unit decommissioning and disposal

- At the end of the system's useful life, a suitably qualified engineer should decommission it. The refrigerant and compressor oil are classed as hazardous waste and as such must be reclaimed and disposed of in the correct manner, including completion of waste transfer paperwork. The system components must be disposed of or recycled as appropriate in the correct manner.

NOTICE

Disposal requirement

Your refrigeration product is marked with this symbol. This means that electrical and electronic products shall not be mixed with unsorted household waste. Do not try to dismantle the system yourself: the dismantling of the refrigeration system, treatment of the refrigerant, of oil and of other parts must be done by a qualified installer in accordance with relevant local and national legislation. Refrigeration equipment must be treated at a specialized treatment facility for re-use, recycling and recovery. By ensuring this product is disposed of correctly, you will help to prevent potential negative consequences for the environment and human health. Please contact the installer or local authority for more information.

Batteries must be removed from the controller and disposed of separately in accordance with relevant local and national legislation.

F-Gas Information

From 1/1/2015, F-Gas Regulation (EC 517/2014) came into force replacing the old Regulation EC 842/2006. This affects system labelling, information supplied within documentation and also the way in which thresholds for frequency of leak testing refrigeration systems are calculated. Please be aware of the following:

- The outdoor unit models covered in this Technical Manual contain fluorinated greenhouse gases.
- The indoor unit models come from the factory pressurized with OFN (Oxygen Free Nitrogen) only.
- The GWP (Global Warming Potential) values of refrigerants which are specified for use in this equipment along with the three new thresholds for leak testing requirements based on TCO_2Eq (Tonnes CO_2 Equivalent) are as follows:

		Refrigerant Charge - kg		
		5T	50T	500T
Refrigerant	GWP	CO_2Eq	CO_2Eq	CO_2Eq
R410A	2088	2.4	23.9	239

- Changes to leak testing requirements are as follows:

OLD LEGISLATION	NEW LEGISLATION	LEAK CHECKING FREQUENCY
3-30 kgs	5-50 TCO_2Eq	Every 12 months but can be increased to 24 months if fitted with a fixed leak detection system.
30-300 kgs	50-500 TCO_2Eq	Every 6 months but can be increased to 12 months if fitted with a fixed leak detection system.
300+ kgs	500+ TCO_2Eq	Every 6 months - however automatic leak detection system is mandatory which requires servicing every 12 months

Please note: From 1st January 2017, the new legislation applies to systems which previously were exempt from leak testing under the 'below 3kg' limit.

A refrigerant charge label is supplied with each unit manufactured from January 2015. The refrigerant charge for the system must be entered on the label along with the TCO_2eq value with indelible ink and must be adhered in the proximity of the product charging port.

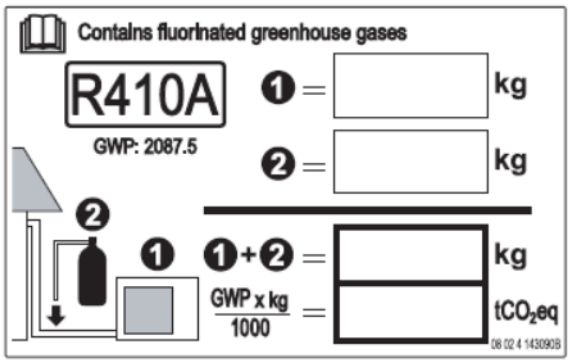

① = Unit refrigerant pre-charge amount

② = Additional refrigerant charge added at site (if required)

① + ② = Total system refrigerant charge

Enter TCO_2eq value from calculation

Drawings

Indoor unit dimensions (25E & 40E)

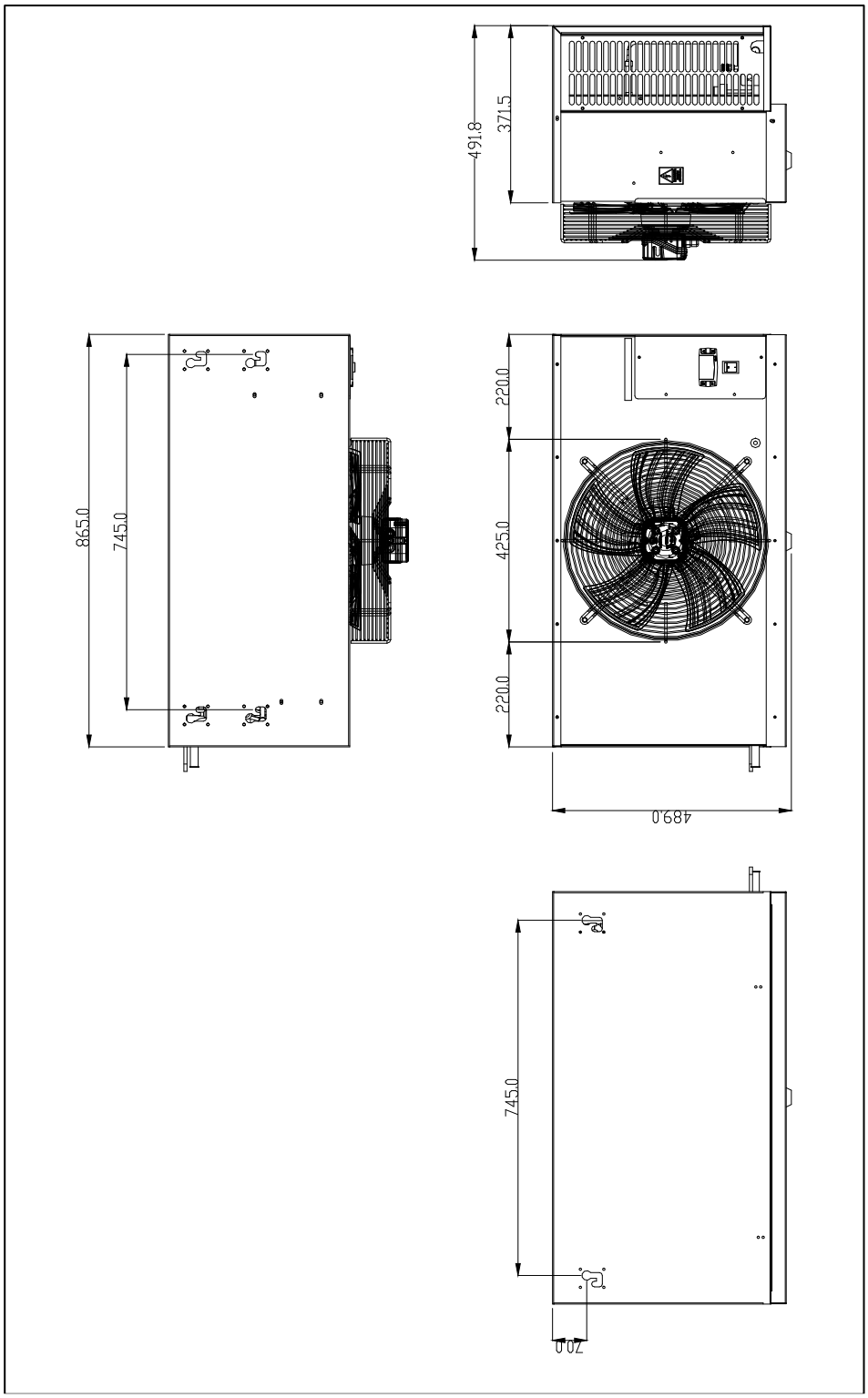

Drawings

Indoor unit dimensions (50E & 60E)

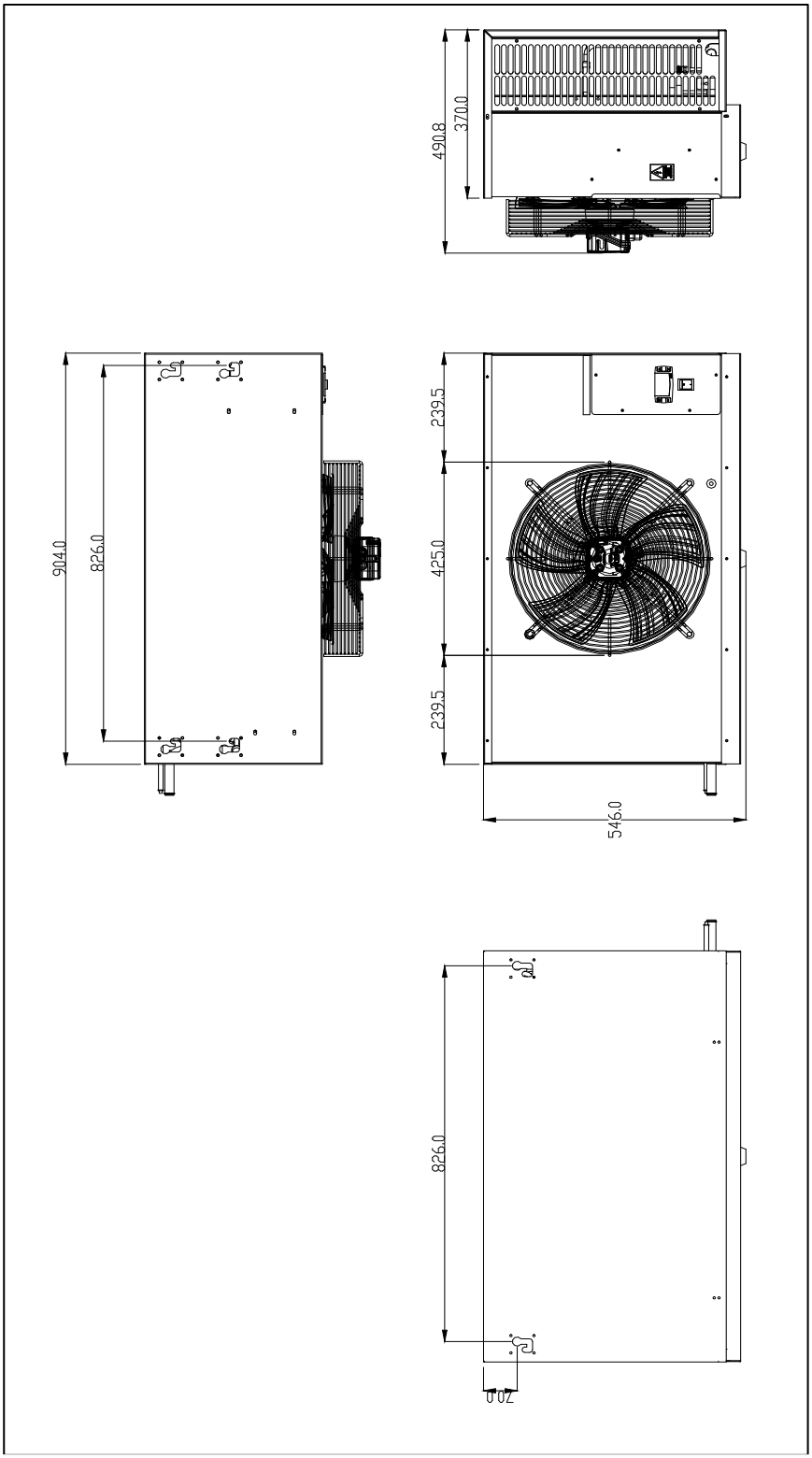

Drawings

Outdoor unit dimensions

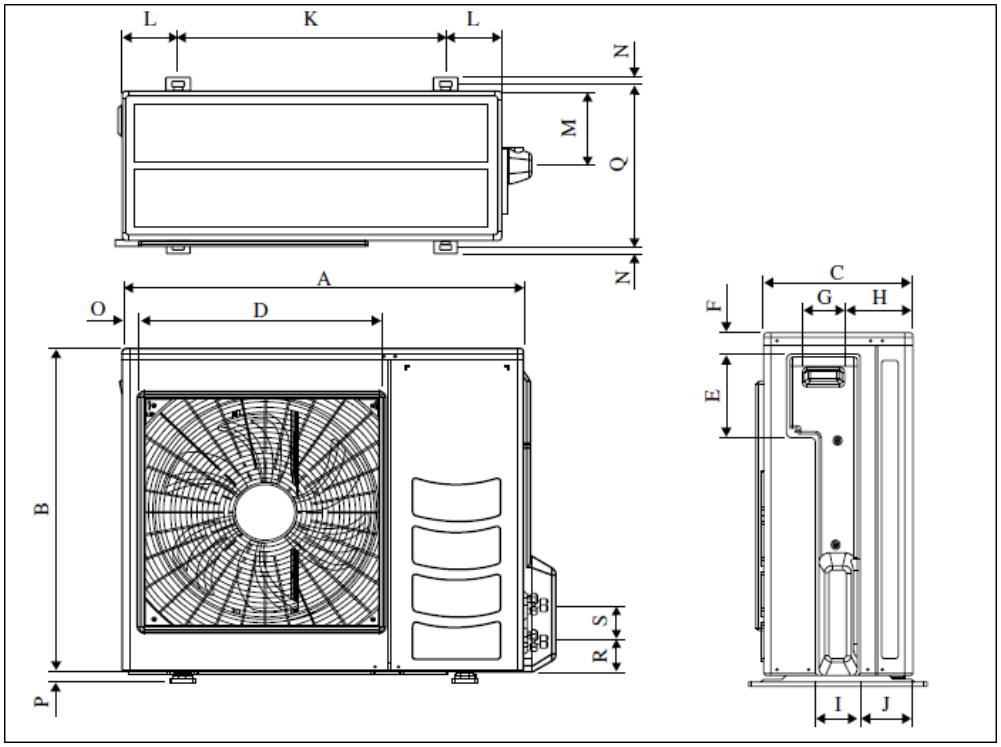

MODEL	A	B	C	D	E	F	G	H	I	J	K	L	M	N	O	P	Q	R	S
J5LC15C (1)	700	521	250	475	170	37	93	100	93	63	441	130	110	14	23	20	278	85	65
J5LC15FV1	658	536	273	n/a	n/a	n/a	n/a	n/a	n/a	n/a	470	96	133	8	n/a	14	299	94	60
J5LC20C (1)/J5LC20CV1	855	628	328	508/520	181/179	44/46	93	149	101	113	603	126	164	17/15	49/34	23	362	73	75
J5LC25C (1)/J5LC25CV1 J5LC28C (1)/J5LC28CV1	855	730	328	513/520	182/179	44/46	93	149	101	113	603	126	164	17/15	47/34	23	362	73	75

Notes:

(1) Existing outdoor unit models will be phased out during 2020 and replaced with the corresponding outdoor unit models ending in V1.

Drawings

Electrical wiring diagrams

Indoor (Pre March 2015)

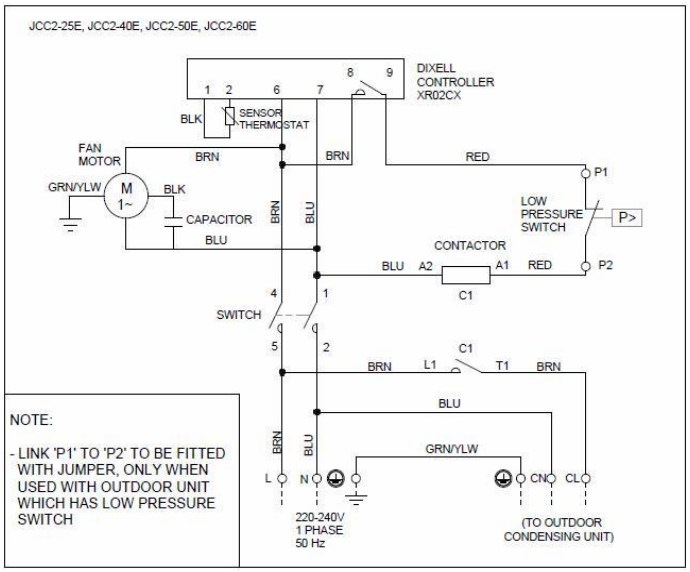

Indoor (Post March 2015)

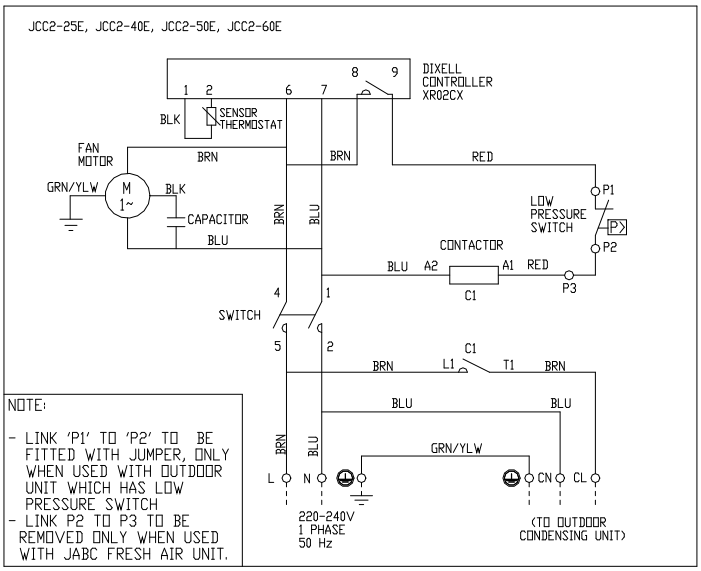

Note: Units manufactured from March 2015 are fitted with an extra terminal (P3) at the terminal block to provide a wiring connection point when used with JABC-1 Fresh Air Unit.

Outdoor

J5LC15FV1

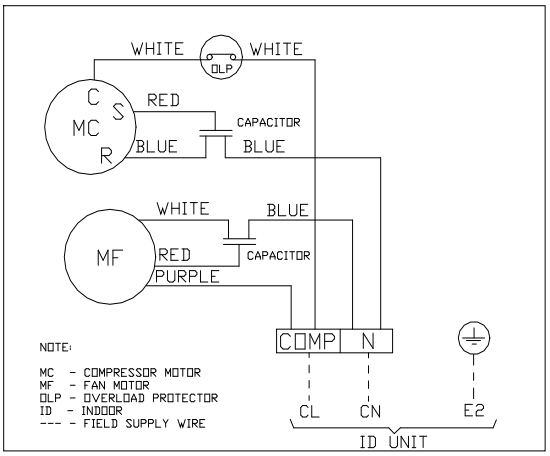

J5LC15~28C & J5LC20~28CV1

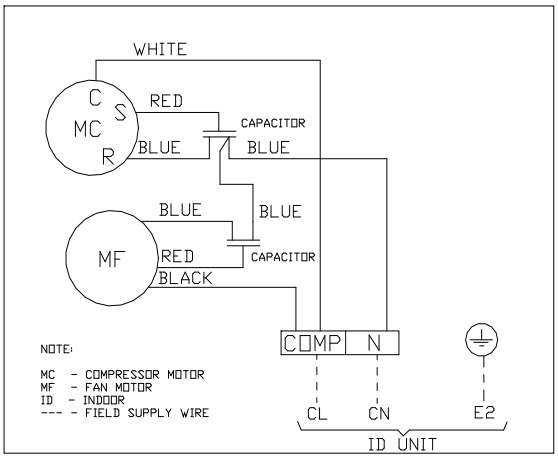

Technical Information

Electronic Controller (Dixell XR02CX)

To check the setpoint temperature:

- Press and release the SET button.

To change the setpoint temperature:

- Press the SET button for more than 3 seconds
- The setpoint value is displayed and the °C or °F led starts flashing.
- To change the setpoint value press the ▲ or ▼ button within 10 seconds.
- To retain the new setpoint press the SET button button again or wait 10 seconds.

To start a manual defrost:

- Press the defrost button (top left) for more than 2 seconds.

To lock the buttons:

- Press the ▲ and ▼ buttons together for more than 3 seconds. The 'OF' message will be displayed and the buttons are now locked to prevent unauthorized access.

To unlock the buttons:

- Press the ▲ and ▼ buttons together for more than 3 seconds. When the 'ON' message is displayed the buttons will be unlocked.

To change a parameter value (selected parameters):

- Enter the programming mode by pressing the SET and the ▼ buttons together for more than 3 seconds (°C or °F LED starts blinking). The first parameter (Hy) is displayed.
- Press the SET button to display the parameter value.
- Use the ▲ and ▼ buttons to change the parameter value.
- Press the SET button to store the new value and move to the next parameter.
- To exit the programming mode press the SET and ▲ buttons together or wait 15 seconds without pressing a button.

To enter the hidden parameter menu (full parameter list):

- Enter the programming mode by pressing the SET and ▼ buttons together for 3 seconds (°C or °F LED starts blinking).
- Release the buttons, and then press the SET and ▼ buttons for more than 7 seconds. L2 will be displayed followed by the first parameter (Hy). **You are now in the hidden menu.**
- Select the required parameter.
- Press the SET button to display the parameter value.
- Use the ▲ and ▼ buttons to change the parameter value.
- Press the SET button to store the new value and move to the next parameter.
- To exit the programming mode press the SET and ▲ buttons together or wait 15 seconds without pressing a button.

Technical Information

Controller parameters

Dixell XR02CX Parameters				
Label	Description	Range	Default setting	**JEH Setting**
Parameter Menu (selected parameters)				
Hy	Differential	0.1 ~ 25°C / 1 ~ 45°F	2.0°C / 4°F	**2.0°C**
ot	Probe calibration	-9.9 ~ 9.9°C / -18 ~ 18°F	0.0	**0.0**
AC	Anti Short Cycle Delay	0 ~ 50 minutes	1	**3**
CH	Kind of Action (Cool / Heat)	cL ~ Ht	cL	**cL**
rE	Resolution (°C only): dE = decimal between -9.9 ~ 9.9°C; in = integer	dE ~ in	dE	**in**
id	Interval between defrost cycles	0 ~ 99 hours	8	**6**
Md	Maximum defrost length	0 ~ 99 minutes	20	**30**
AU	Maximum Alarm Temperature	~ 99°C / ~210°F	99°C / 99°F	**99°C**
AL	Minimum Alarm Temperature	-55°C / -67°F	-55°C / -55°F	**-55°C**
iP	Digital input polarity: oP = activated by closing the contact; cL = activated by opening the contact	cL ~ oP	cL	**cL**
iF	Digital input configuration: EA = external alarm; EA message is displayed: bA = serious alarm; CA message is displayed: do = door switch function: dF = defrost activation: Au = not used: Hc = inversion of the kind of action	EA / bA / do / dF / Au / db / Hc	EA	**EA**
di	Digital input delay. With iF = EL or bA delay between the detection of the external alarm condition and its signalling. With iF = do it represents the delay to activate the door open alarm	0 ~ 99 minutes	5	**5**
Hidden Parameter Menu (Full list including above parameters)				
LS	Minimum Set Point	-55°C / -67°F	-55°C / -55°F	**4°C**
US	Maximum Set Point	99°C / 210°F	99°C / 99°F	**16°C**
od	Output activation delay at startup	0 ~ 99 minutes	0	**0**
Cy	Compressor on time faulty probe. Cy = 0 compressor always OFF	0 ~ 99 minutes	15	**5**
Cn	Compressor off time faulty probe. Cn = 0 compressor always active	0 ~ 99 minutes	30	**10**
CF	Measurement units: °C = Celsius; °F = Fahrenheit	°C / °F	°C	**°C**
dY	Display delay	0 ~ 15 minutes	0	**0**
dF	Display during defrost: rt = real temperature; it = start defrost temperature: St = SET POINT: dF = label dF	rt / it / St / dF	it	**it**
Ad	Temperature alarm delay	0 ~ 99 minutes	15	**15**
dA	Exclusion of temperature alarm at startup	0 ~ 99 minutes	90	**90**
dC	Compressor and fan status when door open: no = normal; Fn = Fans OFF; cP = Compressor OFF; Fc = Compressor and fans OFF	no / Fn / cP / Fc	no	**no**
rd	Regulation with door open: n = no regulation if door is opened; Y = when di is elapsed regulation restarts even if door open alarm is present	n ~ Y	Y	**Y**
Pt	Parameter code table	Read Only	-	**-**
rL	Firmware release	Read Only	-	**-**

Technical Information

Fan speed controller

As detailed on page 4 of this manual, for applications where the system pipe run is longer than 15m, the fitting of a fan speed controller is compulsory.

The suggested fan speed controller is an Aspen Cooling Only model which can be obtained either from your unit distributor or various refrigeration stockists.

The fan speed controller comes supplied with full fitting and set-up instructions. However, brief connection instructions are as follows:

Fan Speed Controller

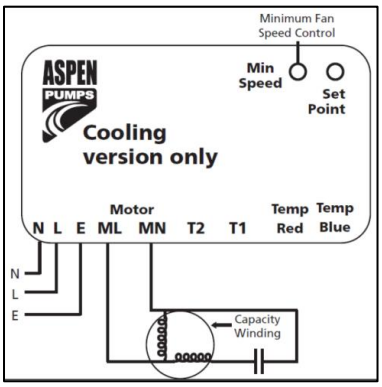

Outdoor Unit

J5LC15FV1

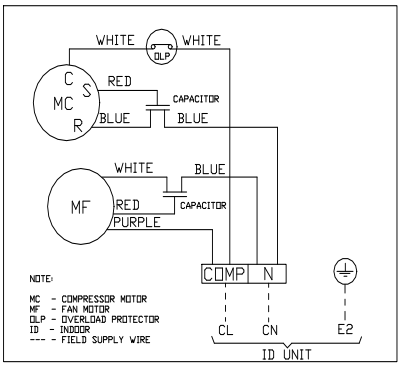

J5LC15~28C & J5LC20~28CV1

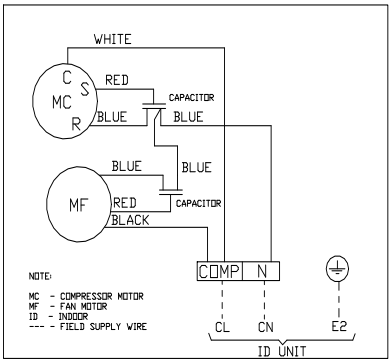

- Find a suitable mounting point for the controller within the outdoor unit casing and fix securely.
- Mount the temperature sensor securely on the condenser coil and connect the red/blue wires to the controller.
- Remove the condenser fan Live/Neutral wires (Black/Blue) from the COMP and N connections on the outdoor unit and connect these two wires to ML (Live) and MN (Neutral) on the controller.
- Make up a new wire to connect COMP (on unit) to L (on controller) and another new wire to connect N (on unit) to N (on controller). Provide a new Earth wire between the unit and E on the controller.
- Tighten all wiring connections and secure all wires as necessary. The wiring is now complete.
- Run the unit and adjust controller as per instructions to give required condensing temperature (35°C~40°C)

Certification

Declaration of Conformity
Konformitätsbescheinigung
Déclaration de Conformité
Conformiteitsverklaring
Declaracion de Conformidad
Dichiarazione di Conformità
Overensstemmelseserklæring
Declaração de Conformidade
Δήλωση Συμμόρφωσης
Deklaracja zgodności

DAIKIN REFRIGERATION MALAYSIA SDN. BHD.
LOT 10, JALAN PERUSAHAAN 8, KAWASAN PERUSAHAAN PEKAN BANTING,
42700 BANTING, SELANGOR DARUL EHSAN, MALAYSIA.

declare under our sole responsibility that the products
bescheinigen auf unsere eigene Verantwortung, daß die Produkten
déclarons sous notre seule responsabilité que les produits
verklaren onder onze uitsluitende verantwoordelijkheid de producten
declaramos sobre nuestra sola responsabilidad que los productos
dichiariamo sotto nostra sola responsabilità che i prodotti
erklærer som eneansvarlige, at produktet
declaramos sob a nossa responsabilidade exclusiva que os produtos
δηλώνει υπό την αποκλειστική της ευθύνη ότι τα προϊόντα
oświadcza z pełną odpowiedzialnością, że produkty

Cellar Cooler

J&E Hall International

Model Designations:
Baumuster-Bezeichnungen:
Désignations Modèles:
Aanduidingen Model:
Disgnaciones Modelo:
ndicazionu de Modello:
modelbetegnelse:
Designações do modelo:
Ονομασίες μοντέλου:
Oznaczenia modelu:

JCC2-25E, JCC2-40E, JCC2-50E, JCC2-60E

which this declaration relates is in conformity with the requirements of the following directives
auf diese Bescheinigung sich beziehen, sind den Vorschriften der Normen entsprechend
auxquels se réfèrent cette déclaration, sont conformes aux prescriptions des directives
waarop deze verklaring betrekking heeft, in overeenstemming is/zijn met de eisen van de volgende richtlijnen
a los cuales se reieren está declaracion, son conformes a las prescripciones de las directivas
alla quale si riferisce questa dichiarazione, sono conormi alle prescrizioni delle directtive
som denne erklæring vedrører, er i overensstemmelse med kravene fremsat i følgende direktiver
que esta declaração está conforme os requerimentos das seguintes directrizes
τα οποία αφορά αυτή η δήλωση συμμορφώνονται με τις απαιτήσεις των παρακάτω οδηγιών
których dotyczy ta deklaracja są zgodne z wymaganiami następujących Dyrektyw

Machinery Directive * **2006/42/EC**

The conformity was checked for MD in accordance with the following harmonised EN standard:
Die Konformität wurde auf MD in Übereinstimmung mit dem folgenden harmonisierten en-Standard überprüft:
La conformité a été vérifiée pour MD conformément aux normes EN-harmonisées:
De conformiteit is gecontroleerd voor MD in overeenstemming met de volgende geharmoniseerde EN-norm:
La conformidad se repasa para MD de acuerdo con el siguiente EN-armonizadas:
La conformità è stata controllata per MD in conformità con il seguente standard armonizzato dell' EN:
Overensstemmelsen blev tjekket for MD i henhold til den harmoniserede EN-standard:
A conformidade foi verificada por MD de acordo com a norma harmonizada EN seguinte:
Η συμμόρφωση ελέγχθηκε ως προς τις οδηγίες MD σύμφωνα με το παρακάτω εναρμονισμένο πρότυπο EN:
Zgodność produktów została sprawdzona przez MD zgodnie z poniższą zharmonizowaną normą PL:

MD	**IEC/ EN 60335-1**	Safety of Household and Similar Electrical Appliances: Part I
	IEC/ EN 60335-2-89	Safety of Household and Similar Electrical Appliances: Part II

* J&E Hall International is authorised to compile the Technical Construction File.
* J&E Hall International hat die Berechtigung die Technische Konstruktionsakte zusammenzustellen.
* J&E Hall International est autorisé à compiler le Dossier de Construction Technique.
* J&E Hall International is gevolmachtigd het Technisch Constructiedossier op te stellen.
* J&E Hall International está autorizado a compilar el Archivo de Construcción Técnica.
* J&E Hall International è autorizzata a redigere il File Tecnico di Costruzione.
* J&E Hall International er bemyndiget til at kompilere teknikkonstruktionsfilen.
* J&E Hall International tem autorização para compilar o Ficheiro de Construção Técnica.
* J&E Hall International είναι εξουσιοδοτημένη να καταρτίσει τον Τεχνικό Φάκελο Κατασκευής.
* J&E Hall International jest upoważniony do opracowania dokumentacji technicznej.

J & E Hall Limited, Hansard Gate, West Meadows, Derby, DE21 6JN, United Kingdom.

General Manager

Teh Yeow Chong
Issue Date: 19 November 2019

THIS PAGE IS LEFT BLANK INTENTIONALLY

J & E Hall Limited
Hansard Gate
West Meadows
Derby, DE21 6JN
England

Tel: + 44 (0) 1332 253400
Fax: + 44 (0) 1332 371061
Email: helpline@jehall.co.uk
www.jehall.com

Issue: 01.01.2020