V3 DIGITAL SINGLE SCROLL
Commercial Condensing Units
Variable Capacity

Medium Temperature Applications

ISSUE: 01.09.2021

CE

DAIKIN

Contents

Nomenclature

L	R	M	D	F	S	0	4	0	0	B	X	Y	1
1	2	3	4	5	6	7	8	9	10	11	12	13	14

1	L - Daikin low temperature air conditioner	7,8,9 & 10	Compressor horse power, 0400 – 4.0HP
2	R – Outdoor Unit	11	B – second Revision
3 & 4	MT – Medium Temp. Tandem Digital Scroll	12	X – Produce by Daikin Refrigeration Malaysia
5	F – with fan speed controller Blank – without fan speed controller	13 & 14	Power Supply: V1 – 1ph/50Hz/220~240V Y1 – 3ph/50Hz/380~415V
6	Refrigerant, S – R404A		

Standard product configuration

Single Digital Scroll

- Copeland hermetic digital scroll compressor – ZBD (Digital)
- Variable compressor capacity control
- Vertical liquid receiver with fusible plug
- Fitted liquid line drier & sight glass
- Oil separator and discharge check valve
- External service valves
- High & Low pressure transducers
- Manual low pressure switch (adjustable)
- High pressure switch on compressor (Fixed cartridge type)
- Flexible pressure hoses
- IP rated control panel
- Mains isolator
- Compressor manual motor starter with short circuit & overload protection
- Compressor contactor
- Advanced programmable controller
- LCD display
- Step down transformer 240V to 24V
- Fuse protection on controller, fan speed controller and backup system
- Mechanical by-pass circuit
- AC modulation fan speed controller
- Alarm relay (volt free)
- Crankcase heater on compressor
- Acoustic insulation to compressor compartment
- Operates with refrigerants R404A, R407A, R407F, R448A, R449A
- BACnet and Modbus Protocol feature

Specifications

Unit Data

Unit Model	Compressor			Oil Sep. Charge	Electrical Data					Coil Volume	Liquid Receiver	Airflow	Connections		Unit Dry Weight	SPL @ 10m [d]
					Compressor			Fan Motors								
	Type	Swept Volume	Oil Charge		NC [a]	MCC [b]	LRC [c]	No.	FLC				Liquid	Suction		
		(m³/h)	(Litres)	(Litres)	(A)	(A)	(A)		(A)	(Litres)	(Litres)	(m³/h)	(inch)	(inch)	(kgs)	dB(A)
LRMDFS0400BXY1	ZBD29KQE-TFD	11.40	1.36	0.6	5.7	10.8	48	1	0.9	4.42	7.6	4250	1/2	7/8	128	39
LRMDFS0600BXY1	ZBD45KQE-TFD	17.10	1.89	0.6	8.6	13.5	74.0	1	0.9	6.89	7.6	4100	1/2	7/8	134	40
LRMDFS0800BXY1	ZBD57KCE-TFD	22.10	1.89	0.6	10.4	15.9	102.0	2	1.8	8.73	13.6	8500	3/4	1 1/8	213	44

Oil Type: Polyolester Oil - (Copeland Ultra 22 CC, Copeland Ultra 32 CC, Copeland Ultra 32-3MAF, Mobil EAL Arctic 22 CC, Uniquema Emkarate RL32CF)

[a] NC = Nominal Current @ condition -10°C Te / +32°C Ta MT

[b] MCC = Maximum Continuous Current

[c] LRC = Locked Rotor Current

[d] Sound Pressure Level (SPL) measured in an anechoic room (-10/+32°C) MT conditions. Alternative conditions may produce different results.

Unit Dimensions

Model	Overall Dimensions (mm)			Mounting Dimensions (mm)	
	W	D	H	W	D
LRMDFS0400BXY1	1353	575	872	945	500
LRMDFS0600BXY1	1353	575	872	945	500
LRMDFS0800BXY1	1348	612	1727	940	560

Performance Data:

The performance data shown in the tables on pages 5 to 12 has the following criteria:

- TE: Evaporating Temperature
- TA: Ambient Temperature
- HP: Approximate Compressor Horsepower
- CC: Cooling Capacity (Watts)
- PC: Power Consumed (Watts)
- COP: Coefficient of Performance
- Data presented in accordance with BS EN13215:2016

Specifications

Performance Data Medium Temperature (R404A) : 10K SH / 0K SC

MODEL	HP	TA \ TE	(Watts)	-20	-15	-10	-5	0	5	10
LRMDFS0400BXY1	4.00	27	CC	5030	6090	7300	8680	10250	12050	14100
		27	PC	2580	2720	2850	2960	3070	3200	3350
		27	COP	1.95	2.24	2.56	2.93	3.34	3.77	4.21
		32	CC	4640	5610	**6720**	7990	9440	11100	13000
		32	PC	2800	2970	3110	3240	3370	3510	3660
		32	COP	1.66	1.89	2.16	2.47	2.80	3.16	3.55
		35	CC	4400	5320	6360	7550	8920	10500	12300
		35	PC	2950	3130	3290	3440	3580	3720	3880
		35	COP	1.49	1.70	1.93	2.19	2.49	2.82	3.17
		38	CC	4150	5010	5990	7110	8400	9880	11600
		38	PC	3110	3320	3500	3660	3810	3960	4120
		38	COP	1.33	1.51	1.71	1.94	2.20	2.49	2.82
		43	CC	3720	4490	5350	6340	7490	8820	10400
		43	PC	3440	3690	3900	4080	4250	4420	4600
		43	COP	1.08	1.22	1.37	1.55	1.76	2.00	2.26
LRMDFS0600BXY1	6.00	27	CC	7390	8770	10300	12000	13900	15900	18100
		27	PC	3900	4240	4590	4950	5310	5680	6050
		27	COP	1.89	2.07	2.24	2.42	2.62	2.80	2.99
		32	CC	6760	8040	**9480**	11050	12800	14700	16800
		32	PC	4240	4590	4950	5310	5680	6050	6420
		32	COP	1.59	1.75	1.92	2.08	2.25	2.43	2.62
		35	CC	6370	7590	8960	10450	12150	13950	16000
		35	PC	4460	4820	5180	5550	5920	6290	6650
		35	COP	1.43	1.57	1.73	1.88	2.05	2.22	2.41
		38	CC	5980	7130	8420	9850	11450	13200	15200
		38	PC	4700	5060	5430	5800	6170	6530	6890
		38	COP	1.27	1.41	1.55	1.70	1.86	2.02	2.21
		43	CC	5310	6340	7480	8780	10250		
		43	PC	5150	5510	5880	6250	6620		
		43	COP	1.03	1.15	1.27	1.40	1.55		
LRMDFS0800BXY1	8.00	27	CC	9600	11550	13800	16300	19100	22300	25800
		27	PC	4920	5270	5620	5970	6300	6620	6920
		27	COP	1.95	2.19	2.46	2.73	3.03	3.37	3.73
		32	CC	8860	10650	**12650**	14900	17450	20300	23400
		32	PC	5310	5700	6090	6480	6860	7220	7550
		32	COP	1.67	1.87	2.08	2.30	2.54	2.81	3.10
		35	CC	8410	10100	11950	14050	16400	19000	21900
		35	PC	5570	5980	6400	6810	7210	7600	7960
		35	COP	1.51	1.69	1.87	2.06	2.27	2.50	2.75
		38	CC	7950	9510	11250	13150	15300	17700	20400
		38	PC	5830	6270	6720	7160	7580	8000	8390
		38	COP	1.36	1.52	1.67	1.84	2.02	2.21	2.43
		43	CC	7160	8500	9980	11600	13400		
		43	PC	6310	6800	7280	7770	8240		
		43	COP	1.13	1.25	1.37	1.49	1.63		

Specifications

Performance Data Medium Temperature (R407A) : 10K SH / 0K SC

MODEL	HP	TA \ TE	(Watts)	-20	-15	-10	-5	0	5	10
LRMDFS0400BXY1	4.00	27	CC	4540	5650	6900	8310	9940	11850	
		27	PC	2510	2590	2680	2780	2890	3000	
		27	COP	1.81	2.18	2.57	2.99	3.44	3.95	
		32	CC	4210	5270	**6440**	7790	9380	11250	
		32	PC	2770	2870	2970	3070	3160	3240	
		32	COP	1.52	1.84	2.17	2.54	2.97	3.47	
		35	CC		5030	6160	7480	9040	10900	
		35	PC		3050	3160	3250	3340	3400	
		35	COP		1.65	1.95	2.30	2.71	3.21	
		38	CC		4790	5880	7150	8680	10550	
		38	PC		3250	3360	3450	3530	3570	
		38	COP		1.47	1.75	2.07	2.46	2.96	
		43	CC			5410	6610	8080	9890	
		43	PC			3720	3820	3880	3900	
		43	COP			1.45	1.73	2.08	2.54	
LRMDFS0600BXY1	6.00	27	CC	6530	8070	9870	11950	14300	16950	
		27	PC	3600	3810	4020	4240	4440	4630	
		27	COP	1.81	2.12	2.46	2.82	3.22	3.66	
		32	CC	6030	7470	**9150**	11050	13200	15550	
		32	PC	4040	4260	4490	4740	5000	5240	
		32	COP	1.49	1.75	2.04	2.33	2.64	2.97	
		35	CC		7290	8700	10500	12500	14650	
		35	PC		4410	4820	5090	5370	5660	
		35	COP		1.65	1.80	2.06	2.33	2.59	
		38	CC		6750	8240	9920	11750		
		38	PC		4900	5170	5460	5780		
		38	COP		1.38	1.59	1.82	2.03		
		43	CC							
		43	PC							
		43	COP							
LRMDFS0800BXY1	8.00	27	CC	8680	10700	13100	15900	19100	22800	
		27	PC	5280	5590	5900	6190	6440	6610	
		27	COP	1.64	1.91	2.22	2.57	2.97	3.45	
		32	CC	8120	10000	**12200**	14750	17650	20900	
		32	PC	5800	6130	6480	6840	7190	7500	
		32	COP	1.40	1.63	1.88	2.16	2.45	2.79	
		35	CC		9600	11700	14050	17000		
		35	PC		6480	6870	7280	7530		
		35	COP		1.48	1.70	1.93	2.26		
		38	CC			11150	13350			
		38	PC			7280	7740			
		38	COP			1.53	1.72			
		43	CC							
		43	PC							
		43	COP							

Specifications

Performance Data Medium Temperature (R407F) : 10K SH / 0K SC

MODEL	HP	TA \ TE	(Watts)	-20	-15	-10	-5	0	5	10
LRMDFS0400BXY1	4.00	27	CC		6080	7380	8900	10700	12850	
		27	PC		2830	2940	3040	3130	3200	
		27	COP		2.15	2.51	2.93	3.42	4.02	
		32	CC		5660	**6910**	8350	10050	12150	
		32	PC		3150	3260	3350	3430	3490	
		32	COP		1.80	2.12	2.49	2.93	3.48	
		35	CC		5400	6600	8000	9670	11650	
		35	PC		3360	3470	3570	3650	3700	
		35	COP		1.61	1.90	2.24	2.65	3.15	
		38	CC			6290	7640	9250	11200	
		38	PC			3700	3800	3880	3930	
		38	COP			1.70	2.01	2.38	2.85	
		43	CC				7030	8550		
		43	PC				4220	4290		
		43	COP				1.67	1.99		
LRMDFS0600BXY1	6.00	27	CC	7230	8770	10500	12450	14550	16800	
		27	PC	3510	3900	4330	4790	5250	5710	
		27	COP	2.06	2.25	2.42	2.60	2.77	2.94	
		32	CC	6410	7990	**9730**	11650	13700	15950	
		32	PC	3870	4280	4720	5180	5650	6090	
		32	COP	1.66	1.87	2.06	2.25	2.42	2.62	
		35	CC		7670	9170	11100	13200	15450	
		35	PC		4410	4980	5440	5900	6340	
		35	COP		1.74	1.84	2.04	2.24	2.44	
		38	CC			8520	10500			
		38	PC			5250	5710			
		38	COP			1.62	1.84			
		43	CC							
		43	PC							
		43	COP							
LRMDFS0800BXY1	8.00	27	CC	8880	10900	13300	15950	18950	22300	
		27	PC	5210	5530	5860	6210	6560	6880	
		27	COP	1.70	1.97	2.27	2.57	2.89	3.24	
		32	CC	8300	10250	**12450**	15000	17850	21000	
		32	PC	5730	6040	6400	6760	7130	7480	
		32	COP	1.45	1.70	1.95	2.22	2.50	2.81	
		35	CC		9830	12000	14400	17150	20100	
		35	PC		6380	6740	7120	7500	7880	
		35	COP		1.54	1.78	2.02	2.29	2.55	
		38	CC			11500	13800	16400		
		38	PC			7110	7500	7900		
		38	COP			1.62	1.84	2.08		
		43	CC							
		43	PC							
		43	COP							

Specifications

Performance Data Medium Temperature (R448A / R449A) : 10K SH / 0K SC

MODEL	HP	TA \ TE	(Watts)	-20	-15	-10	-5	0	5	10
LRMDFS0400BXY1	4.00	27	CC	4610	5630	6800	8110	9600	11300	13150
		27	PC	2480	2660	2840	3000	3170	3340	3530
		27	COP	1.86	2.12	2.39	2.70	3.03	3.38	3.73
		32	CC	4320	5280	**6380**	7610	9010	10600	12450
		32	PC	2630	2860	3060	3260	3450	3630	3810
		32	COP	1.64	1.85	2.08	2.33	2.61	2.92	3.27
		35	CC	4130	5060	6110	7300	8660	10250	12000
		35	PC	2720	2980	3210	3420	3620	3800	3980
		35	COP	1.52	1.70	1.90	2.13	2.39	2.70	3.02
		38	CC	3940	4830	5840	6980	8300	9830	11600
		38	PC	2790	3090	3350	3580	3790	3980	4160
		38	COP	1.41	1.56	1.74	1.95	2.19	2.47	2.79
		43	CC		4460	5390	6460	7690	9150	10850
		43	PC		3250	3570	3840	4080	4280	4460
		43	COP		1.37	1.51	1.68	1.88	2.14	2.43
LRMDFS0600BXY1	6.00	27	CC	6760	8280	9930	11700	13650	15750	18050
		27	PC	3440	3830	4260	4720	5220	5770	6360
		27	COP	1.97	2.16	2.33	2.48	2.61	2.73	2.84
		32	CC	6220	7700	**9320**	11050	13000	15100	17450
		32	PC	3800	4210	4630	5100	5580	6100	6640
		32	COP	1.64	1.83	2.01	2.17	2.33	2.48	2.63
		35	CC	5860	7540	8910	10650	12550	14700	17100
		35	PC	4060	4320	4890	5350	5810	6290	6790
		35	COP	1.44	1.75	1.82	1.99	2.16	2.34	2.52
		38	CC	5500	6940	8490	10200	12100	14250	
		38	PC	4330	4750	5180	5620	6060	6510	
		38	COP	1.27	1.46	1.64	1.81	2.00	2.19	
		43	CC		6280	7790	9480			
		43	PC		5240	5670	6090			
		43	COP		1.20	1.37	1.56			
LRMDFS0800BXY1	8.00	27	CC	8720	10700	13000	15650	18750	22400	26700
		27	PC	4320	4730	5200	5730	6310	6940	7600
		27	COP	2.02	2.26	2.50	2.73	2.97	3.23	3.51
		32	CC	8370	10200	**12300**	14650	17300	20400	23900
		32	PC	4550	4990	5510	6110	6780	7520	8330
		32	COP	1.84	2.04	2.23	2.40	2.55	2.71	2.87
		35	CC	8160	9910	11850	14000	16400	19100	
		35	PC	4700	5170	5730	6390	7140	7980	
		35	COP	1.74	1.92	2.07	2.19	2.30	2.39	
		38	CC	7940	9610	11450	13400	15500		
		38	PC	4880	5370	5970	6700	7550		
		38	COP	1.63	1.79	1.92	2.00	2.05		
		43	CC	7530	8960	10350				
		43	PC	5260	5870	6710				
		43	COP	1.43	1.53	1.54				

Specifications

Performance Data Medium Temperature (R404A) : 20°C RGT / 0K SC

MODEL	HP	TA \ TE	(Watts)	-20	-15	-10	-5	0	5	10
LRMDFS0400BXY1	4.00	27	CC	5470	6530	7730	9060	10550	12250	14100
		27	PC	2580	2720	2850	2960	3070	3200	3350
		27	COP	2.12	2.40	2.71	3.06	3.44	3.83	4.21
		32	CC	5120	6100	**7190**	8410	9770	11300	13000
		32	PC	2800	2970	3110	3240	3370	3510	3660
		32	COP	1.83	2.05	2.31	2.60	2.90	3.22	3.55
		35	CC	4900	5820	6850	8000	9270	10700	12300
		35	PC	2950	3130	3290	3440	3580	3720	3880
		35	COP	1.66	1.86	2.08	2.33	2.59	2.88	3.17
		38	CC	4670	5540	6500	7570	8770	10100	11600
		38	PC	3110	3320	3500	3660	3810	3960	4120
		38	COP	1.50	1.67	1.86	2.07	2.30	2.55	2.82
		43	CC	4280	5060	5910	6850	7890	9070	10400
		43	PC	3440	3690	3900	4080	4250	4420	4600
		43	COP	1.24	1.37	1.52	1.68	1.86	2.05	2.26
LRMDFS0600BXY1	6.00	27	CC	8040	9450	11000	12650	14400	16200	18100
		27	PC	3900	4240	4590	4950	5310	5680	6050
		27	COP	2.06	2.23	2.40	2.56	2.71	2.85	2.99
		32	CC	7470	8780	**10200**	11750	13350	15050	16800
		32	PC	4240	4590	4950	5310	5680	6050	6420
		32	COP	1.76	1.91	2.06	2.21	2.35	2.49	2.62
		35	CC	7130	8370	9730	11150	12700	14300	16000
		35	PC	4460	4820	5180	5550	5920	6290	6650
		35	COP	1.60	1.74	1.88	2.01	2.15	2.27	2.41
		38	CC	6780	7950	9230	10600	12050	13550	15200
		38	PC	4700	5060	5430	5800	6170	6530	6890
		38	COP	1.44	1.57	1.70	1.83	1.95	2.08	2.21
		43	CC	6180	7220	8350	9570	10900		
		43	PC	5150	5510	5880	6250	6620		
		43	COP	1.20	1.31	1.42	1.53	1.65		
LRMDFS0800BXY1	8.00	27	CC	10450	12400	14600	17050	19700	22600	25800
		27	PC	4920	5270	5620	5970	6300	6620	6920
		27	COP	2.12	2.35	2.60	2.86	3.13	3.41	3.73
		32	CC	9770	11600	**13550**	15750	18100	20700	23400
		32	PC	5310	5700	6090	6480	6860	7220	7550
		32	COP	1.84	2.04	2.22	2.43	2.64	2.87	3.10
		35	CC	9370	11050	12950	14950	17100	19450	21900
		35	PC	5570	5980	6400	6810	7210	7600	7960
		35	COP	1.68	1.85	2.02	2.20	2.37	2.56	2.75
		38	CC	8950	10550	12250	14100	16050	18150	20400
		38	PC	5830	6270	6720	7160	7580	8000	8390
		38	COP	1.54	1.68	1.82	1.97	2.12	2.27	2.43
		43	CC		9620	11100	12600	14200		
		43	PC		6800	7280	7770	8240		
		43	COP		1.41	1.52	1.62	1.72		

Specifications

Performance Data Medium Temperature (R407A) : 20°C RGT / 0K SC

MODEL	HP	TA \ TE	(Watts)	-20	-15	-10	-5	0	5	10
LRMDFS0400BXY1	4.00	27	CC		5820	7050	8450	10050	11900	
		27	PC		2590	2680	2780	2890	3000	
		27	COP		2.25	2.63	3.04	3.48	3.97	
		32	CC			**6620**	7960	9520	11350	
		32	PC			2970	3070	3160	3240	
		32	COP			2.23	2.59	3.01	3.50	
		35	CC			6360	7660	9180	11000	
		35	PC			3160	3250	3340	3400	
		35	COP			2.01	2.36	2.75	3.24	
		38	CC				7350	8840	10650	
		38	PC				3450	3530	3570	
		38	COP				2.13	2.50	2.98	
		43	CC				6830	8250	9990	
		43	PC				3820	3880	3900	
		43	COP				1.79	2.13	2.56	
LRMDFS0600BXY1	6.00	27	CC		8320	10150	12200	14500	17050	
		27	PC		3810	4020	4240	4440	4630	
		27	COP		2.18	2.52	2.88	3.27	3.68	
		32	CC			**9450**	11350	13400	15700	
		32	PC			4490	4740	5000	5240	
		32	COP			2.10	2.39	2.68	3.00	
		35	CC				10800	12750	14800	
		35	PC				5090	5370	5660	
		35	COP				2.12	2.37	2.61	
		38	CC				10250	12000		
		38	PC				5460	5780		
		38	COP				1.88	2.08		
		43	CC							
		43	PC							
		43	COP							
LRMDFS0800BXY1	8.00	27	CC		11050	13450	16200	19400	23000	
		27	PC		5590	5900	6190	6440	6610	
		27	COP		1.98	2.28	2.62	3.01	3.48	
		32	CC			**12650**	15150	17950	21100	
		32	PC			6480	6840	7190	7500	
		32	COP			1.95	2.21	2.50	2.81	
		35	CC				14450	17050		
		35	PC				7280	7690		
		35	COP				1.98	2.22		
		38	CC							
		38	PC							
		38	COP							
		43	CC							
		43	PC							
		43	COP							

Specifications

Performance Data Medium Temperature (R407F) : 20°C RGT / 0K SC

MODEL	HP	TA \ TE	(Watts)	-20	-15	-10	-5	0	5	10
LRMDFS0400BXY1	4.00	27	CC		6170	7480	8980	10750	12850	
		27	PC		2830	2940	3040	3130	3200	
		27	COP		2.18	2.54	2.95	3.43	4.02	
		32	CC			**7030**	8460	10150	12200	
		32	PC			3260	3350	3430	3490	
		32	COP			2.16	2.53	2.96	3.50	
		35	CC			6740	8130	9760	11700	
		35	PC			3470	3570	3650	3700	
		35	COP			1.94	2.28	2.67	3.16	
		38	CC				7780	9360	11250	
		38	PC				3800	3880	3930	
		38	COP				2.05	2.41	2.86	
		43	CC					8690		
		43	PC					4290		
		43	COP					2.03		
LRMDFS0600BXY1	6.00	27	CC		8920	10650	12600	14650	16850	
		27	PC		3900	4330	4790	5250	5710	
		27	COP		2.29	2.46	2.63	2.79	2.95	
		32	CC			**9950**	11850	13900	16050	
		32	PC			4720	5180	5650	6090	
		32	COP			2.11	2.29	2.46	2.64	
		35	CC				11350	13400	15550	
		35	PC				5440	5900	6340	
		35	COP				2.09	2.27	2.45	
		38	CC							
		38	PC							
		38	COP							
		43	CC							
		43	PC							
		43	COP							
LRMDFS0800BXY1	8.00	27	CC			13500	16150	19100	22400	
		27	PC			5860	6210	6560	6880	
		27	COP			2.30	2.60	2.91	3.26	
		32	CC			**12750**	15250	18050	21100	
		32	PC			6400	6760	7130	7480	
		32	COP			1.99	2.26	2.53	2.82	
		35	CC				14700	17350	20300	
		35	PC				7120	7500	7880	
		35	COP				2.06	2.31	2.58	
		38	CC					16650		
		38	PC					7900		
		38	COP					2.11		
		43	CC							
		43	PC							
		43	COP							

Specifications

Performance Data Medium Temperature (R448A / R449A) : 20°C RGT / 0K SC

MODEL	HP	TA \ TE	(Watts)	-20	-15	-10	-5	0	5	10
LRMDFS0400BXY1	4.00	27	CC	4790	5820	6980	8280	9730	11350	13150
		27	PC	2480	2660	2840	3000	3170	3340	3530
		27	COP	1.93	2.19	2.46	2.76	3.07	3.40	3.73
		32	CC	4530	5490	**6590**	7800	9170	10700	12450
		32	PC	2630	2860	3060	3260	3450	3630	3810
		32	COP	1.72	1.92	2.15	2.39	2.66	2.95	3.27
		35	CC		5290	6340	7510	8830	10350	12000
		35	PC		2980	3210	3420	3620	3800	3980
		35	COP		1.78	1.98	2.20	2.44	2.72	3.02
		38	CC		5080	6080	7210	8480	9930	11600
		38	PC		3090	3350	3580	3790	3980	4160
		38	COP		1.64	1.81	2.01	2.24	2.49	2.79
		43	CC			5660	6710	7890	9270	10850
		43	PC			3570	3840	4080	4280	4460
		43	COP			1.59	1.75	1.93	2.17	2.43
LRMDFS0600BXY1	6.00	27	CC	7010	8550	10200	12000	13900	15900	18050
		27	PC	3440	3830	4260	4720	5220	5770	6360
		27	COP	2.04	2.23	2.39	2.54	2.66	2.76	2.84
		32	CC	6520	8020	**9640**	11350	13250	15250	17450
		32	PC	3800	4210	4630	5100	5580	6100	6640
		32	COP	1.72	1.90	2.08	2.23	2.37	2.50	2.63
		35	CC		7870	9260	10950	12850	14850	17100
		35	PC		4320	4890	5350	5810	6290	6790
		35	COP		1.82	1.89	2.05	2.21	2.36	2.52
		38	CC			8870	10550	12400	14450	
		38	PC			5180	5620	6060	6510	
		38	COP			1.71	1.88	2.05	2.22	
		43	CC			8220	9870			
		43	PC			5670	6090			
		43	COP			1.45	1.62			
LRMDFS0800BXY1	8.00	27	CC	9070	11050	13350	15950	19000	22500	26700
		27	PC	4310	4730	5200	5730	6310	6940	7600
		27	COP	2.10	2.34	2.57	2.78	3.01	3.24	3.51
		32	CC	8760	10600	**12700**	15000	17650	20600	23900
		32	PC	4540	4990	5520	6110	6780	7520	8330
		32	COP	1.93	2.12	2.30	2.45	2.60	2.74	2.87
		35	CC		10350	12300	14450	16800	19300	
		35	PC		5170	5730	6390	7140	7980	
		35	COP		2.00	2.15	2.26	2.35	2.42	
		38	CC		10050	11900	13850	15900		
		38	PC		5370	5970	6700	7550		
		38	COP		1.87	1.99	2.07	2.11		
		43	CC			10850				
		43	PC			6710				
		43	COP			1.62				

Health and Safety

Important Note:

Only qualified personnel, who are familiar with refrigeration systems and components including all controls, should perform the installation and start-up of the system. To avoid potential injury, use care when working around coil surfaces or sharp edges of metal cabinets. All piping and electrical wiring should be installed in accordance with all applicable standards and local by-laws.

General information

Before Installation

- Ensure the units received are the correct models for the intended application.
- Ensure the refrigerant; electrical supply and MWP are all suitable for the proposed application.
- Check there is no damage to the units. Any damage should be advised to the supplier immediately.
- Check that the proposed equipment locations are suitable and provide adequate support for the weight of the units.

Offloading and Lifting

- Whenever a condensing unit is lifted, it should be from the base and, where possible, all packing and protection is kept in position.
- If lifting equipment is required, ensure that it is suitable, certificated, and that the operatives are qualified to use it.
- When using a fork-lift or pallet truck to lift the unit, the two support points should be sufficiently apart to give stability when lifting and suitably placed to distribute the load on the forks.
- If slings are used, care should be taken to ensure that the slings do not crush the casework or coil.
- When lifting by crane, use spreader bars to prevent compressing the top of the equipment.
- Do not drop the unit. Should this inadvertently happen, it should be immediately unpacked and inspected for damage.
- Use the appropriate spreader bars/lifting sling with the holes and lugs provided.

During Installation and subsequent maintenance

- Installation and maintenance are to be performed only by qualified personnel who are familiar with local codes and regulations, and experienced with this type of equipment.
- Safe working methods are identified and operatives have suitable Personal Protective Equipment (PPE).
- Ensure the working area has adequate ventilation during brazing procedures.
- The units contain moving machinery and electrical power hazards, which may cause severe injury or death. Disconnect and shut off power before installation or service of the equipment.
- Refrigerant release into the atmosphere is illegal. Proper evacuation, recovery, handling and leak testing procedures must be observed at all times.
- Units must be earthed.
- No maintenance work should be attempted prior to disconnecting the electrical supply.
- The electrical covers and fan guards must remain fitted at all times.
- Use of the units outside of the design conditions and the application for which the units were intended may be unsafe and be detrimental to the units, regardless of short or long term operation.
- The units are not designed to withstand loads or stresses from other equipment or personnel. Such extraneous loads or stress may cause failure/leak/injury.

Installation

Unit location

- In order to achieve maximum cooling capacity, the installation location for the condensing unit should be carefully selected.

- Install the condensing unit in such a way so that hot air ejected by the condensing unit cannot be drawn in again (short circuit of hot discharge air). Allow sufficient space for maintenance around the unit.

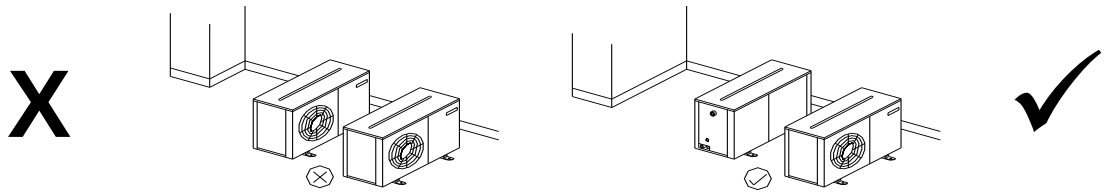

- Ensure that there is no obstruction to air flow into or out of the unit. Remove obstacles which block air intake or discharge.

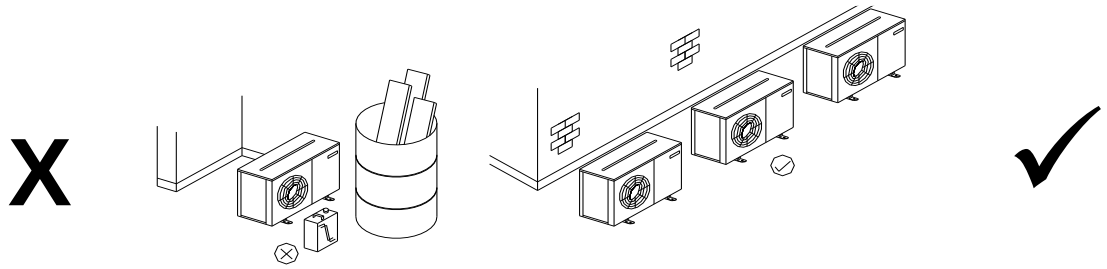

- The location must be well ventilated, so the unit can draw in and distribute plenty of air thus lowering the condensing temperature.
- To optimize the unit running conditions, the condenser coil must be cleaned at regular intervals.
- The unit must be level in all directions.

Installation clearances

- The installation location should allow sufficient space for air flow and maintenance around the unit.

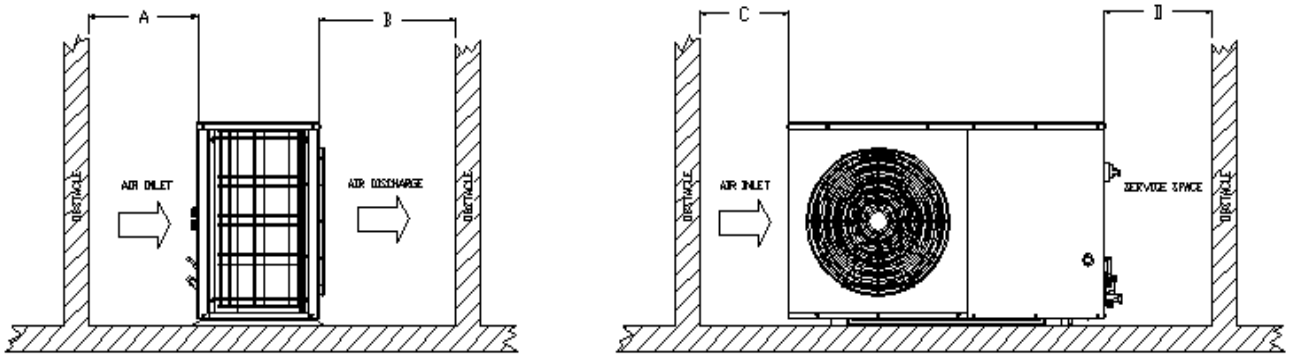

ALL MODELS	A	B	C	D
Minimum Distance	300 mm	1000 mm	300 mm	500 mm

Installation

Field piping

Important Note:

Pipe sizing should only be determined by qualified personnel. Correct line sizing will minimize the pressure drop and maintain sufficient gas velocity for proper oil return. All applicable standards must be observed in the installation of refrigerant piping.

To ensure satisfactory operation and performance, the following points should be noted:

- Pipework routes must be as simple and as short as possible.
- Avoid low points on pipework where oil can accumulate.
- Suction gas velocity must be sufficient to ensure good oil return.
- Use only clean, dehydrated refrigeration grade copper tube with long radius bends.
- Avoid flare type connections and take great care when brazing. Use only silver alloy rods.
- Run braze without over filling to ensure there is no leakage into the tube.
- To prevent oxidation, blow oxygen free nitrogen through pipework when brazing.
- Install insulation on all suction lines and on all pipes penetrating walls or passing through hot areas.
- Adequately support all pipe work at a maximum of 2 metre intervals.
- Where the condensing unit is situated below the indoor unit (coldroom evaporator / display case), the height difference between the two units should be no more than 6 metres.
- In vertical pipework, the use of U-trap and double suction risers is often required. These suction risers must always be fitted with a U-trap at the bottom and a P-trap at the top and never be higher than 4m unless a second U-trap system is fitted.
- Additional oil may be required if piping length exceeds 20m or multiple oil traps are fitted. Check the oil level closely during commissioning and add oil as necessary. Add oil in small amounts. Do not overfill the compressor!
- When installing a single compressor condensing unit (excluding Digital units) with multiple evaporators connected which operate independently, care should be taken to ensure that the evaporating pressure/temperature does not fall outside the compressor operating limit at minimum load. If there is a potential for this scenario, consider multiple evaporators fed by a single solenoid valve or separate condensing units.
- Suction pipework should slope gently back towards the unit to assist oil return to the compressor. A fall of approximately 2cm per metre of pipework is acceptable.
- Liquid lines should be sized to ensure a full supply of liquid refrigerant to the expansion device. Careful attention should be paid to sizing of liquid lines on large risers (maximum rise 6m).
- In some circumstances, a suction accumulator (not supplied) may be required. It offers protection against refrigerant flood back during operation and also against off-cycle migration by adding internal free volume to the low side of the system.
- Tests must be conducted to ensure the amount of off-cycle migration to the compressor does not exceed the compressor's charge limit.
- Wherever possible the system should be installed to utilize a pump down configuration.
- Maximum recommended pipe length is 50m.

Important Note:

One of the main factors affecting equipment reliability and compressor service life is refrigeration circuit contamination. During installation, circuit contamination can be caused by:

- Brazing & Welding Oxides
- Filings & Particles from de-burring pipework
- Brazing Flux
- Moisture & Air

Installation

Pressure testing

The condensing units are pressure tested in the factory prior to dispatch. All units come with a holding charge of oxygen free nitrogen. Remove the holding charge indication tag which is tied to service valve before installation.

Once the pipework installation is complete, it should be pressure tested prior to evacuation to test for leaks.
A pressure leak test should be carried out using oxygen free nitrogen (OFN). NEVER USE OXYGEN FOR PRESSURE TESTING SYSTEMS. A calibrated nitrogen pressure regulator must always be used. Before starting any pressure testing, ensure the area surrounding the system is safe, inform relevant personnel and fit warning signs indicating high pressure testing. Also, use correct PPE as required.

Always pressurize the system slowly, preferably in stages up to the maximum required pressure. Maximum test pressures applicable to the unit are as follows:

Test pressure	
High side	**Low side**
28 barG (405 psiG)	**19 barG (275 psiG)**

Listen for any possible leaks and check all joints with bubble spray. If any leaks are discovered, release pressure slowly from system until empty, repair leak and then restart pressure testing procedure. Never attempt to repair a leak on a pressurized system.
A strength test should also be incorporated (to installed pipework only) according to applicable standards.
Once testing has been completed satisfactorily, release the pressure from the system gradually and safely to external atmosphere.

Evacuation & Charging

Important Note:

Moisture prevents proper functioning of the compressor and the refrigeration system. Ensure that a good quality vacuum pump is used to pull a minimum vacuum of 250 microns (0.25 torr).

Once pressure testing has been completed, the system can now be evacuated to remove air and any moisture from the piping. This can be done as follows:

- Ensure any nitrogen charge is safely released from the system.
- Connect a gauge manifold to the connections on the service valves on the condensing unit.
- Connect a vacuum pump and vacuum gauge to the system.
- Ensure all gauge manifold and service valves are open as required.
- Evacuate the system until vacuum is below 250 microns (0.25 torr).

Note: A triple evacuation procedure is recommended for all new systems or where moisture is suspected.

Once the system is isolated and the vacuum pump is switched off, any rise in pressure indicates that either there may be a leak in the system or moisture is still present. In this case, recheck the system for leaks, repair as necessary, and then restart the evacuation procedure. Once completed satisfactorily, the vacuum pump and vacuum gauge can be removed.

At this point, the refrigerant charge can be added to the system as required. Refrigerants must be charged in the liquid phase. **Charging of liquid into the suction side of the system should ONLY be done with a metering device.** Use calibrated weighing scales to record the amount of refrigerant added to the system.

Installation

Electrical

Important Note:

The mains electrical supply to the condensing unit must be via a suitable motor rated circuit breaker or fuse. A mains isolator is fitted to all condensing units therefore an additional isolator is not required unless site conditions or regulations dictate differently.

J & E Hall Fusion Digital Scroll condensing units require a 400 volt / 3 phase / 50Hz supply, which must include a Neutral and an Earth. These systems are not suitable for any other supply voltages (other than a deviation of +/- 10% of the above values) and are not suitable for 60Hz supplies.

The three phase supply must be connected to ensure that the compressor motor rotates in the correct direction. Please see note on page 25.

Mains cable type and sizing must be selected for the particular application and the electrical installation should conform to the current local standards.

- Cables to the condensing unit should wherever possible be routed through the cable glands supplied on the rear of the units.
- Connect the mains supply to the units as per the wiring diagrams on pages 33 – 34.

To gain access to the electrical box, turn the mains isolator switch on the end of the unit to the OFF position, loosen the screws on the left hand side of the door and open door. The electrical box is located behind the door. Remove the screws in the electrical box cover to access components.

Commissioning

Access to Controller and LCD Display

Important Note:

Warning! Only Authorized personnel are allowed to access the *controller* and LCD display.

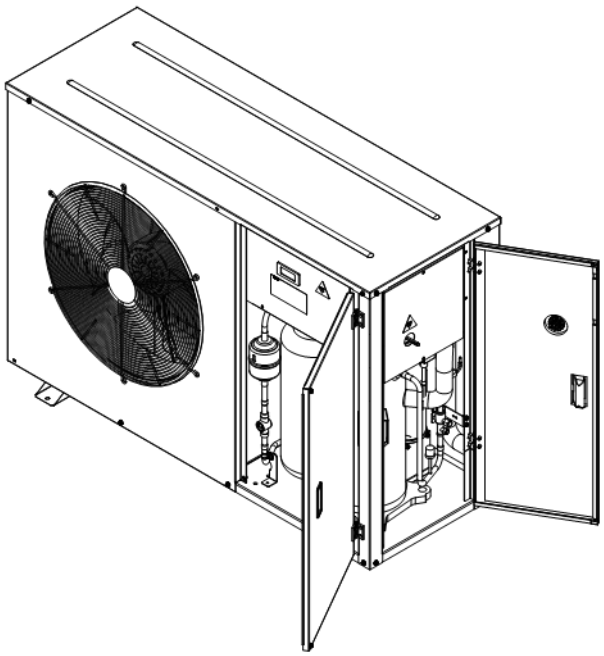

Commissioning

Pre startup checks

Before starting the condensing unit the following checks should be carried out as a minimum:

- Check electrical supply is correct and all connections are sound.
- All moving parts are free and guards fitted.
- Compressor oil level satisfactory.
- Mechanical bypass switch on the control panel is in the **OFF** (0) position.
- LCD display cable is connected to the controller to enable settings.
- Check setting of LP back up control (factory set).
- Overload set correctly.
- All valves in correct operating position.
- Initial refrigerant charge.
- Crankcase heater energized for a minimum of 12 hours before compressor start-up.
- Gauge manifold connected to both low and high sides of system.

Please wait for 1 minute for controller loading after switching on the main isolator.

Before running the unit, the controller settings on page 22 should be checked/altered as required:

Running the unit

- Switch unit on at controller (see page 23).
- Run the unit and check compressor and condenser fan operation.
- Check system pressures and temperatures, gas charge and running currents of motors to ensure correct operation.
- Check transducer / sensor readings are accurate (calibrated equipment required).
- Check compressor suction superheat. This should be between 10K and 20K at normal operating conditions.
- Final adjustment of controller settings.
- Allow the system to run for 3 – 4 hours. Check compressor oil level and top up with the correct oil type as required (see page 4). Recheck the compressor oil level again after 24 hours operation.
- Carry out final leak test and ensure all panels/covers are fitted and screws tightened.
- Log all information along with the system model and serial numbers for future reference.
- Complete refrigerant labelling to comply with F-Gas regulations.
- Ensure that the customer / responsible person are provided with basic operating instructions and where electrical isolators are situated in case of emergency.

Commissioning

The User Terminal Interface – LCD Display

The user terminal can be used to perform all the operations allowed by the program, display the operating conditions of the unit at all times, and set the parameters.

It can be disconnected from the main board, and in fact is not required for operation.

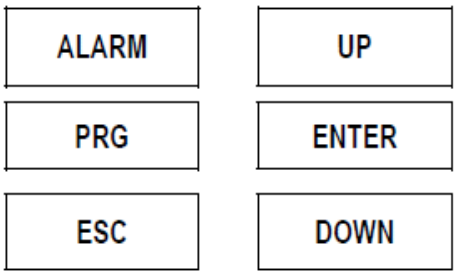

Button Functions

ALARM	Displays the alarms
UP	If the cursor is in the home position (top left corner), scrolls up the screens in the same group; if the cursor is in a setting field, and increases the value.
DOWN	If the cursor is in the home position (top left corner), scrolls down the screens in the same group; if the cursor is in a setting field, and decreases the value.
ENTER	Used to move the cursor from the home position (top left corner) to the setting fields, in the setting fields confirms the set value and moves to the next parameter.
PRG	Accesses the menu for selecting the group of parameters to be displayed/modified (access to the parameters is confirmed by pressing the [Enter] button).
ESC	Used to move back to previous screen/sub-menu. Continuous pressing of the ESC button will eventually return to the HOME screen.

Important Note:

All controller parameters are preset in the factory and are not accessible due to password protection. The only settings which can be changed are the compressor setpoint (suction pressure), the refrigerant type and the time/date. The fan setpoint is also preset but can be adjusted if required.

Commissioning

Controller Home Screen

Following controller power-up and initialisation process (approximately 1 minute), the controller home screen will appear as follows:

The low pressure and high pressure conditions of the unit are displayed. If **OFF by Key** is indicated in the lower box, then the unit is switched OFF on the controller. To switch the unit ON, follow instructions on page 23. Further information on the system conditions can be displayed by pressing the DOWN arrow:

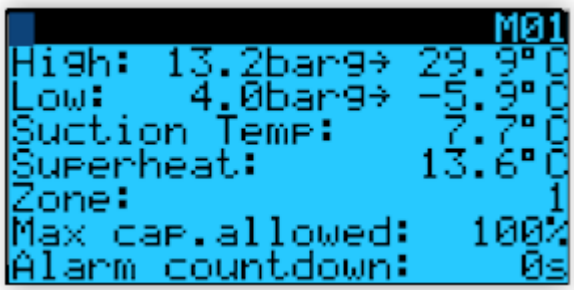

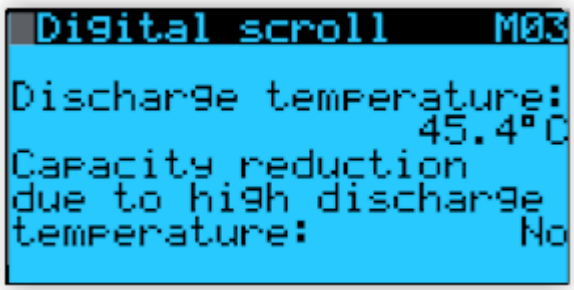

Commissioning

Changing Set Point & Refrigerant Selection

1. With controller Home screen displayed, Press PRG button to go Main Menu screen and select “B. Setpoint” using DOWN button. Press ENTER button. Screen B01 is displayed.

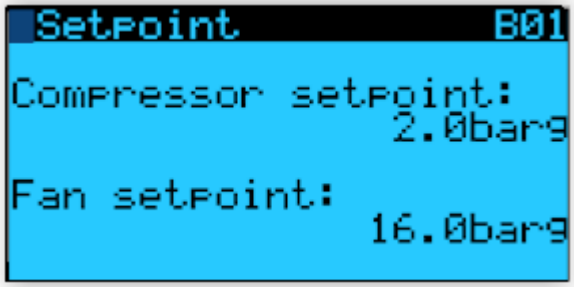

1. Using ENTER button, move the cursor from the ‘home’ position to the Compressor Setpoint and adjust value as required by using UP or DOWN buttons.
2. Press the ENTER button again to move the cursor to the Fan Setpoint and adjust the value as required. Please note that the setpoint value of 16.0 bar is recommended for R404A/R407A/R407F/R448A/R449A operation.
3. Press ENTER button once more to return the cursor to the ‘home’ position.
4. From screen B01, use the DOWN button to move to the next screen – B02.

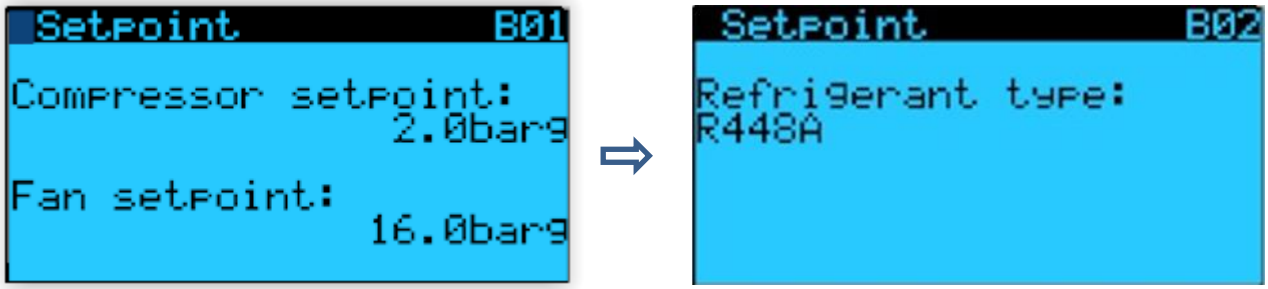

5. At screen B02, the Refrigerant Type can be selected. The default refrigerant is set as R448A.
6. To change the refrigerant, press ENTER to move the cursor from the ‘home’ position to the refrigerant type.
7. Use UP or DOWN buttons to scroll to different refrigerants.
8. With required refrigerant selected, press ENTER button to return cursor to ‘home’ position.
9. Press ESC button repeatedly to return to Home screen.
10. The unit is now ready to run once the controller is set to ON.

<u>IMPORTANT NOTE:</u> The only refrigerants which should be selected are R404A, R407A, R407F, R448A & R449A.

Commissioning

Switch Unit ON / OFF (By Controller)

1. With controller Home screen displayed, Press PRG button to go Main Menu screen and select “A. On/Off Unit”

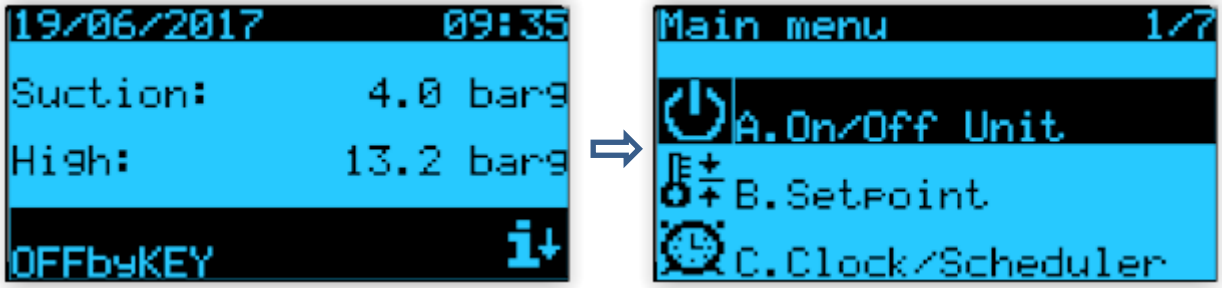

2. Press ENTER button. Screen A01 is displayed.

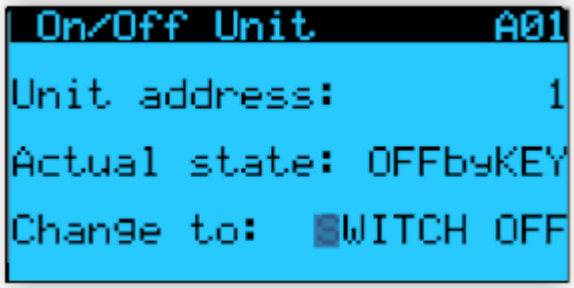

3. Press ENTER button to move cursor from home position to SWITCH OFF value. Switch Unit ON by using UP/DOWN arrows. Press ENTER button to confirm.

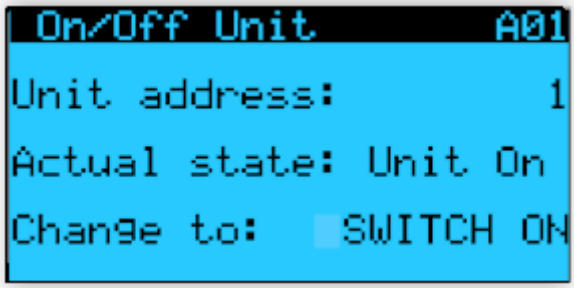

4. Press ESC button repeatedly to return to Home Screen. This should now show ON by KEY at the bottom of the screen.

5. The unit will start up following a short delay (assuming all conditions for compressor start-up are met).

Commissioning

Altering Low Pressure Alarm Notification Setting (Optional)

1. With controller Home screen displayed, Press PRG button to go Main Menu screen and select “B.Setpoint”

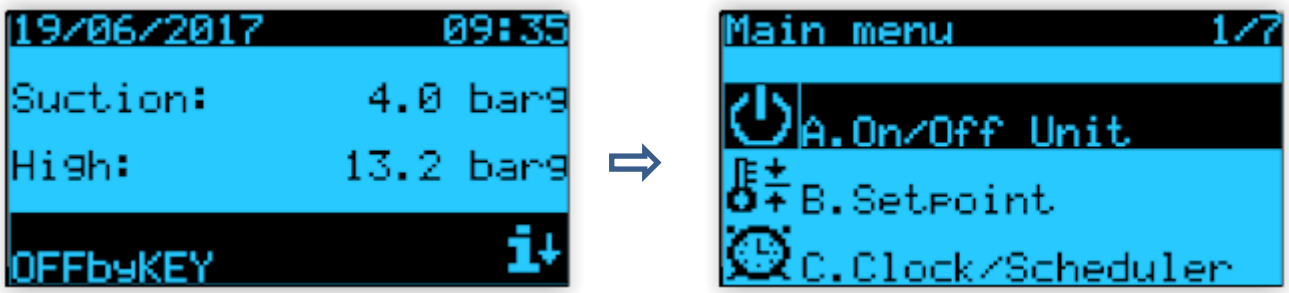

2. Press ENTER button and followed with down button till Screen B03 is displayed.

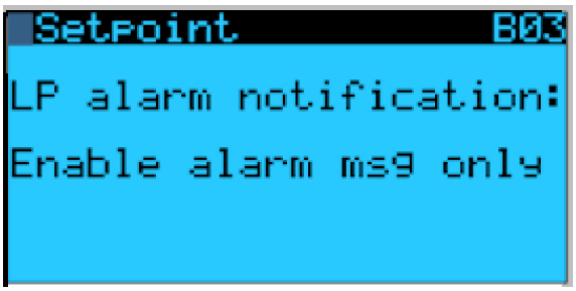

3. Press ENTER button to move cursor from ‘home’ position to the selection. Select the desired low pressure alarm notification setting by UP/DOWN arrows. Three type of low pressure alarm notification setting is available:

   (i) Enable alarm msg only (by default)
   (ii) Disable all
   (iii) Enable all

4. With required low pressure alarm notification setting selected, press ENTER button to confirm.

5. Press ESC button repeatedly to return to Home Screen.

6. The unit is now ready to run once the controller is set to ON.

The action for each low pressure alarm notification setting when system pressure is lower than the set limit of the low pressure transducer/switch as below:

Low Pressure Alarm Notification Setting	Controller Display	Actions
• Enable alarm msg only	• Alarm code and warning symbol ⚠ are displayed • Event log is recorded	• K4R Alarm relay will not be activated
• Disable all	• Alarm code and warning symbol ⚠ are not displayed • Event log is recorded	• K4R Alarm relay will not be activated
• Enable all	• Alarm code and warning symbol ⚠ are displayed • Event log is recorded	• K4R Alarm relay will be activated after pre-set time delay (300s)

Commissioning

Compressor Operation

The compressor(s) operate in accordance to the suction pressure setpoint which is programmed into the controller. There is a differential pressure setting both above and below the setpoint. This allows stable operation of the compressors without constantly switching on & off due to small variations in suction pressure. This range is known as the Neutral Zone. When the compressor(s) are operating within this zone, there will be no change to capacity status (i.e. no compressor switched on/off or additional loading/unloading of variable capacity compressor).

Once the suction pressure goes outside the Neutral Zone, then the controller reacts by increasing or decreasing capacity, depending on whether the pressure is above or below the Neutral Zone. The rate at which the capacity increases or decreases depends upon the setting of the Minimum and Maximum timers within the controller. This means that the further away the suction pressure moves away from the Neutral Zone (either above or below), the quicker the controller will adjust the compressor capacity.

On Digital twin compressor units, the compressor with the capacity control is always the first to start and the last to stop.

Digital Scroll compressor motors are designed to run only in one direction. The correct rotation of a three phase compressor motor depends on the connection of the three incoming phases to the unit. Correct rotation can be determined by a drop in suction pressure and a rise in discharge pressure when the compressor is energized. Running the compressor for a short period of time in reverse direction will have no negative impact but prolonged running in reverse direction may cause premature failure. ***To reverse the rotation of a three phase digital scroll compressor, shut off the incoming power supply to the unit, swap connection of any two of the three incoming phases at the unit isolator, reapply power to the unit and following compressor restart, recheck operating pressures.***

Digital compressor:

At initial start-up, the digital compressor will run at 50% capacity for three minutes followed by 1 minute at 100% capacity. Following this, the compressor will modulate the capacity according to the system requirement in relation to the suction pressure set-point.

Vacuum operation:

Do not operate scroll compressors in a vacuum condition, as this will cause the scrolls to overheat very quickly causing premature failure.

System charge:

Ensure an adequate liquid charge has been introduced to the high side of the system before starting to ensure a minimum operating pressure on the suction side of 0.5 bar is maintained, otherwise overheating of the scrolls and subsequent damage may occur.

Commissioning

Safety pressure switch settings (Mechanical)

The Saginomiya SNS low pressure switch fitted to the JEH Digital Scroll condensing unit has adjustable cut-out and differential. High pressure protection is provided by a cartridge type high pressure switch (HP1) which has fixed settings.

High Pressure Safety

The high pressure safety switch is required to stop the compressor should the discharge pressure exceed the values shown in the following table. The differential pressure is fixed at 6 bar (87 psi). Once tripped, it will create an alarm condition which requires manual reset at the controller.

Refrigerant	R404A/R407A/R407F/R448A/R449A
Cut Out / Cut In (bar g)	28 / 22
Cut Out / Cut In (psi g)	410 / 323

Low Pressure Safety

The adjustable low pressure safety switch provides compressor protection from low suction pressure/evaporating temperature in Normal (controller) operation. In mechanical bypass mode, it provides compressor control. It also protects the compressor against deep vacuum operation, a potential cause of failure due to internal arcing and overheating. The low pressure switch is factory set as below. For Normal (controller) operation, please do not adjust this setting.

For operation in bypass mode, the low pressure control should be set to control the compressor (fixed speed only for twin compressor) at the required SST according to the application. **If adjusted for operation in bypass mode, the low pressure control must be reset to factory setting as below before returning to Normal (controller) operation.**

Refrigerant	R404A/R407A/ R407F/ R448A/ R449A
Application	M*
Cut Out / Cut In (bar g)	1.0 / 3.0
Cut Out / Cut In (psi g)	15 / 44

AC Fan Speed Modulation Controller

The fan speed control is factory preset with a ±3.0barG differential setting. With this setting, the fan operation is as follows:

Refrigerant	R404A/R407A/ R407F/ R448A/R449A
Fan Setpoint (bar g)	16
Fan start run (bar g)	13
Fan Full Speed (bar g)	19

The fan under FSC control will start at 100% speed for approximately 5 seconds before start modulates between 45% of full fan speed and 100%.

Commissioning

AC Fan Speed Modulation Controller (cont'd)

- Recommended settings to gain higher energy efficiency as published in the Ecodesign data sheets are as follows:

Refrigerant	R404A/R407A/ R407F/ R448A/R449A
Condenser fan (Fdc28)	Cut off enable: No
Fan setpoint limit (Fdc16)	Minimum: 8.0barg Maximum: 28.0barg
Setpoint (B01)	Fan setpoint: 13.5 barg
Regulation (Fdc11)	Differential: 5.5 barg Dead band: 0.0barg

Go to Fdc16, to change fan setpoint limit, minimum to 8.0barg, then go to Fdc11, Fdc28 & B01 to change as table above.

Manual Bypass Operation

In the event of failure of the main electronic controller, the unit can be run **temporarily** in mechanical bypass mode. By changing the position of the manual bypass switch mounted on the electrical box from '0' to '1', the compressor will run at 100% capacity – controlled by the adjustable LP switch. In bypass mode, the condenser fan will run without fan speed control.

Note:

Please ensure the bypass switch is always at "0" position while running in electronic controller mode!

Control Logic

Parameters for neutral zone compressor control

1. Preset differentials for neutral zone, activation zone and deactivation zone.

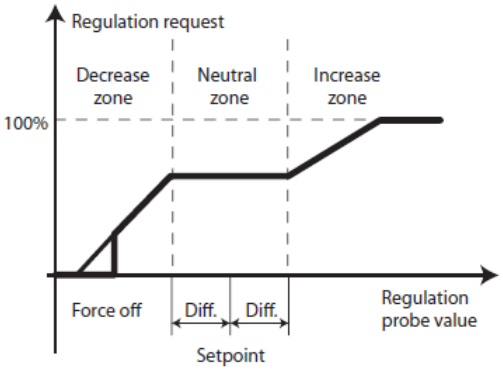

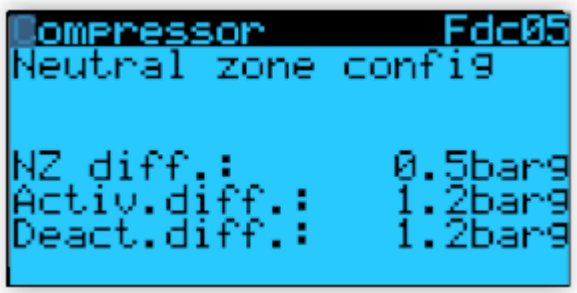

Neutral zone

The operating principle is schematized in the above figure:
Inside the neutral zone the capacity request sent by the controller is constant (except when there is a modulation device and modulation is enabled inside the neutral zone) and the value satisfies the pressure control request in those specific operating conditions. Therefore within this zone no device is stopped or started.
In the decrease zone, the request also decreases at a rate that depends on the deviation from the set point, and vice-versa in the increase zone the request increases proportionally to the deviation.

For the increase and decrease zones, the following can be used:
• Fixed times: the request decreases or increases constantly as time elapses.
• Variable times: the request decreases or increases more quickly (according to the settings) as the deviation from the set point increases.
Note: The figure shows the increase and decrease with fixed times.

Control Logic

Parameters for neutral zone compressor control

As well as the decrease and increase differentials, 4 time parameters are preset, two for each zone, which represent the maximum and minimum time to reach the request, equal to 0% or 100%, for the decrease and increase respectively.

Example: the decrease/increase times (minimum and maximum) represent the time needed to change from maximum to minimum capacity and vice-versa, and not the time between the deactivation/activation of the individual device. For example, in the case of 4 devices with the same capacity, an increase time of 180 s means that one device is activated every 45 s.
In the situation shown in the figure, the request sent by the controller decreases/increases slowly as soon as the controlled value is outside of the Neutral zone, while it decreases/increases quickly the further the controlled value moves away from the Neutral zone; in this way the response of the system is faster when further from steady conditions.

Note: When using fixed times, the maximum and minimum must be set to the same value. In this case, the request sent by the controller decreases/increases constantly inside the deactivation/ activation differential.

1. Preset loading and unloading time

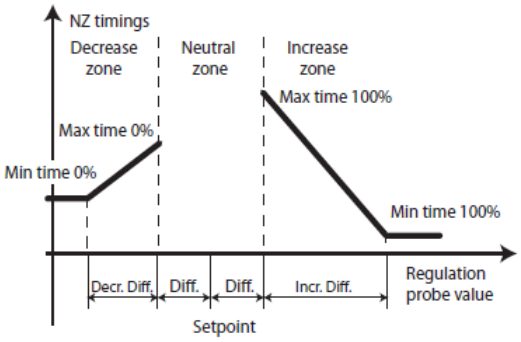

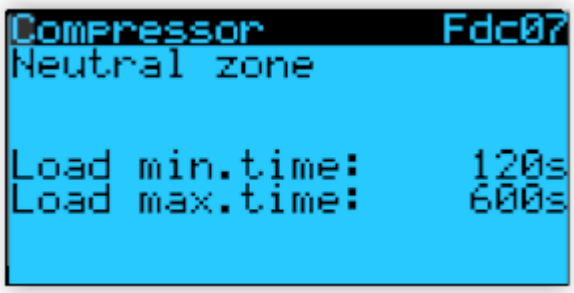

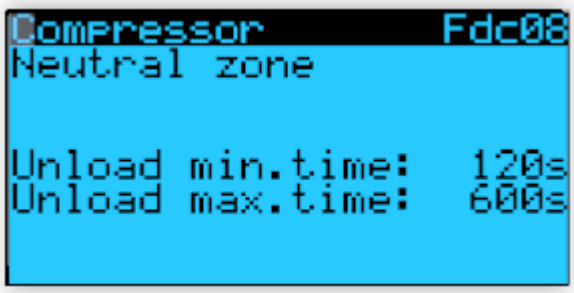

2. Preset time interval for loading and unloading compressor

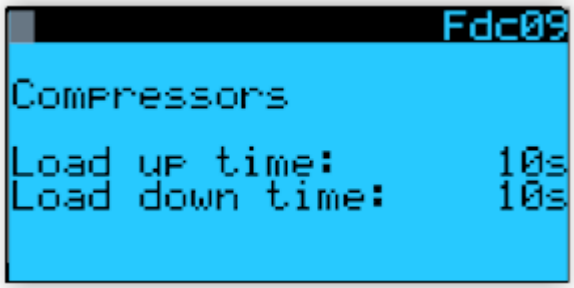

Note: None of the above settings can be altered

Alarm Information

Alarm Settings

1. Low pressure alarm (by transducer)

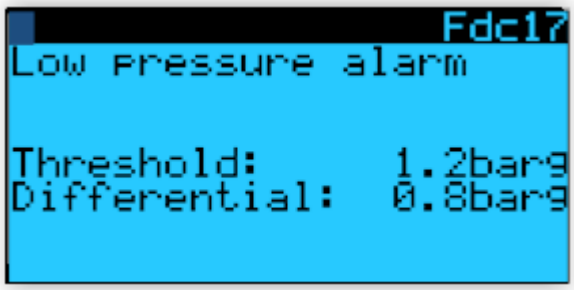

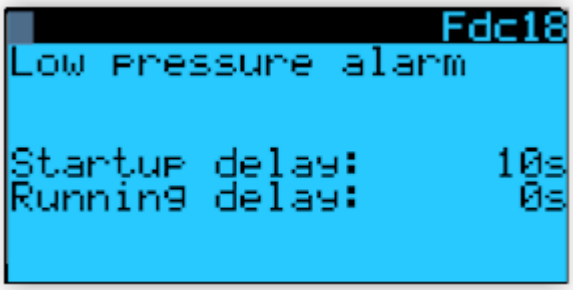

2. High pressure alarm (by transducer)

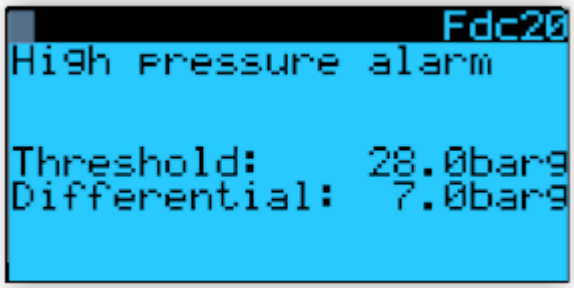

3. High condensing coil temperature alarm

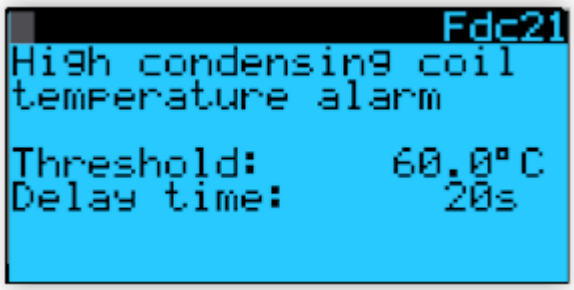

4. High discharge alarm for fixed scroll compressor (if applicable)

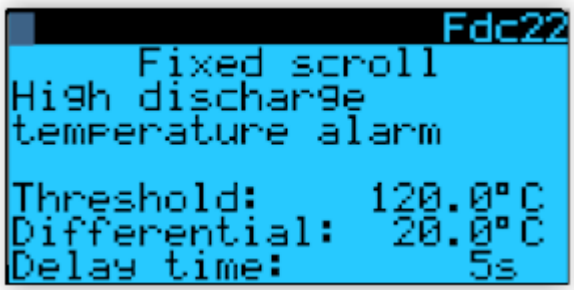

Alarm Information

Alarm Settings

The alarms below are in ascending order of priority. When there is any alarm, the alarm code will be displayed on the main screen and the alarm LED will be on or blinking.

Code	Description	Reset type
A01	Clock board error	Auto
A08	Suction temperature probe fault	Auto
A09	Outdoor temperature probe fault	Auto
A10	Condensing coil temperature probe fault	Auto
A11	Discharge temperature probe fault	Auto
A13	Discharge pressure transducer fault	Auto
A14	Suction pressure transducer fault	Auto
A15	Outside of operating envelope (Digital scroll)	Auto
A16	Condensing coil high temperature	Auto
A17	Compressor high discharge temperature alarm	Auto
A19	Compressor overload trip	Auto
A24	Low pressure alarm by transducer	Auto:
A25	High pressure alarm by transducer	Auto: less than 3 times in 30 minutes Manual: 3 times or more in 30 minutes
A26	Low pressure alarm by pressure switch	Auto
A27	Compressor high pressure alarm by pressure switch	Manual

Alarm LED

Off	No alarm
On	Only auto reset alarm
Blinking	Manual reset alarm

Auto: An alarm condition is created but when cleared the unit will restart automatically.

Manual: An alarm condition is created but requires resetting manually before the unit can restart.

To Reset Alarm Condition:

- Press **ALARM** button for more than 5 seconds.
- Power controller **OFF** then back **ON**.

BACnet and Modbus Protocol

To enable this BACnet and Modbus Protocol feature, an additional serial card is required to be plugged into the board

Protocol	Part-code	Description, (Design Special)
BACnet MS/TP	PCO10B0BA0	pCOnet BACnet MS/TP RS485 Serial Card
Modbus RTU	PCOS004850	Modbus, Optocoupled RS485 Serial Card

The protocol can be for BACnet protocol or Modbus RTU protocol on screen Fc01

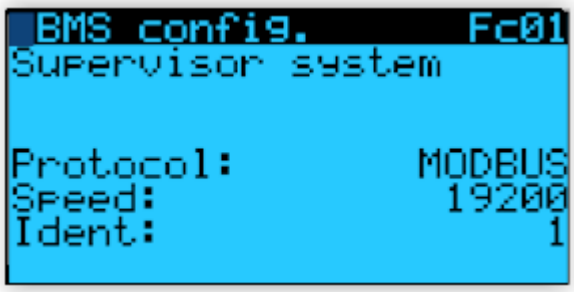

Please contact J & E Hall for the BMS point list for Modbus and BACnet protocol.

Dimensional Drawings

LRMDFS0400BXY1, LRMDFS0600BXY1

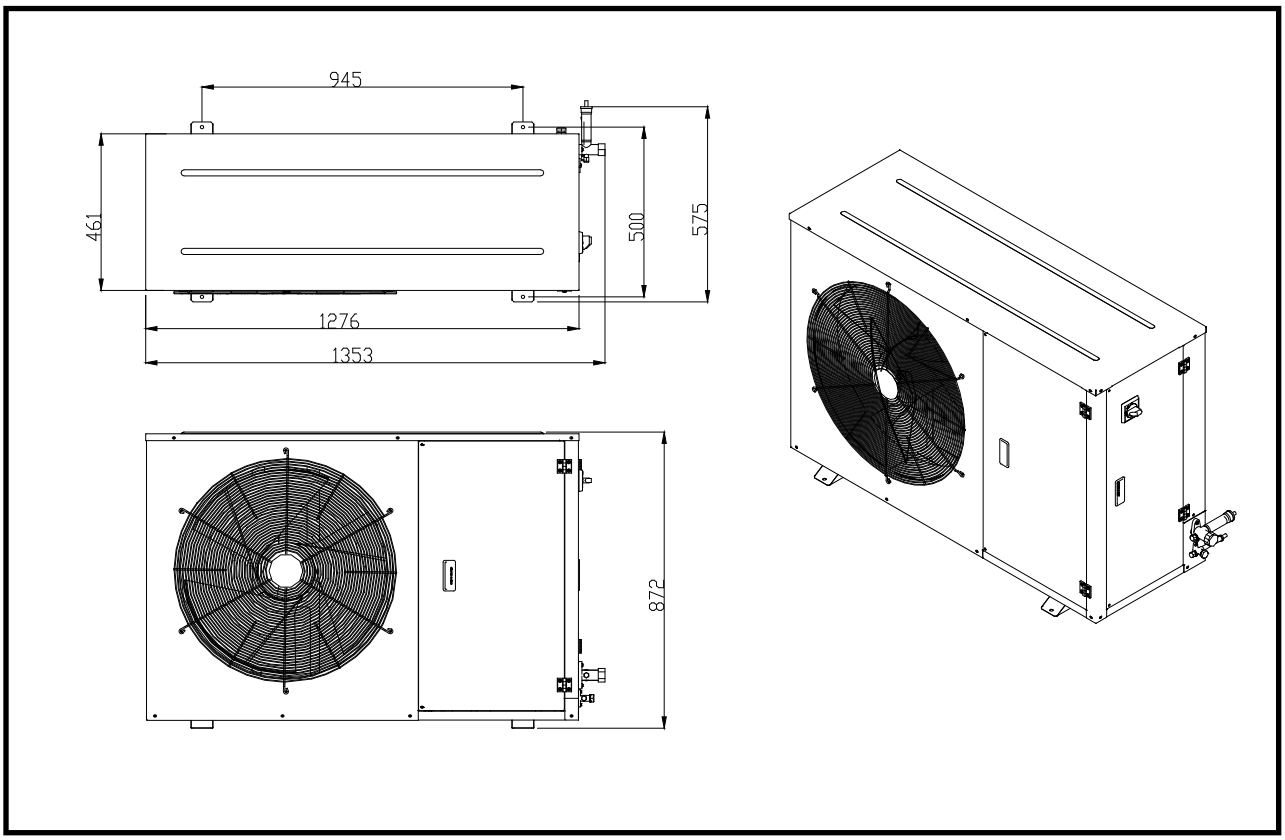

LRMDFS0800BXY1

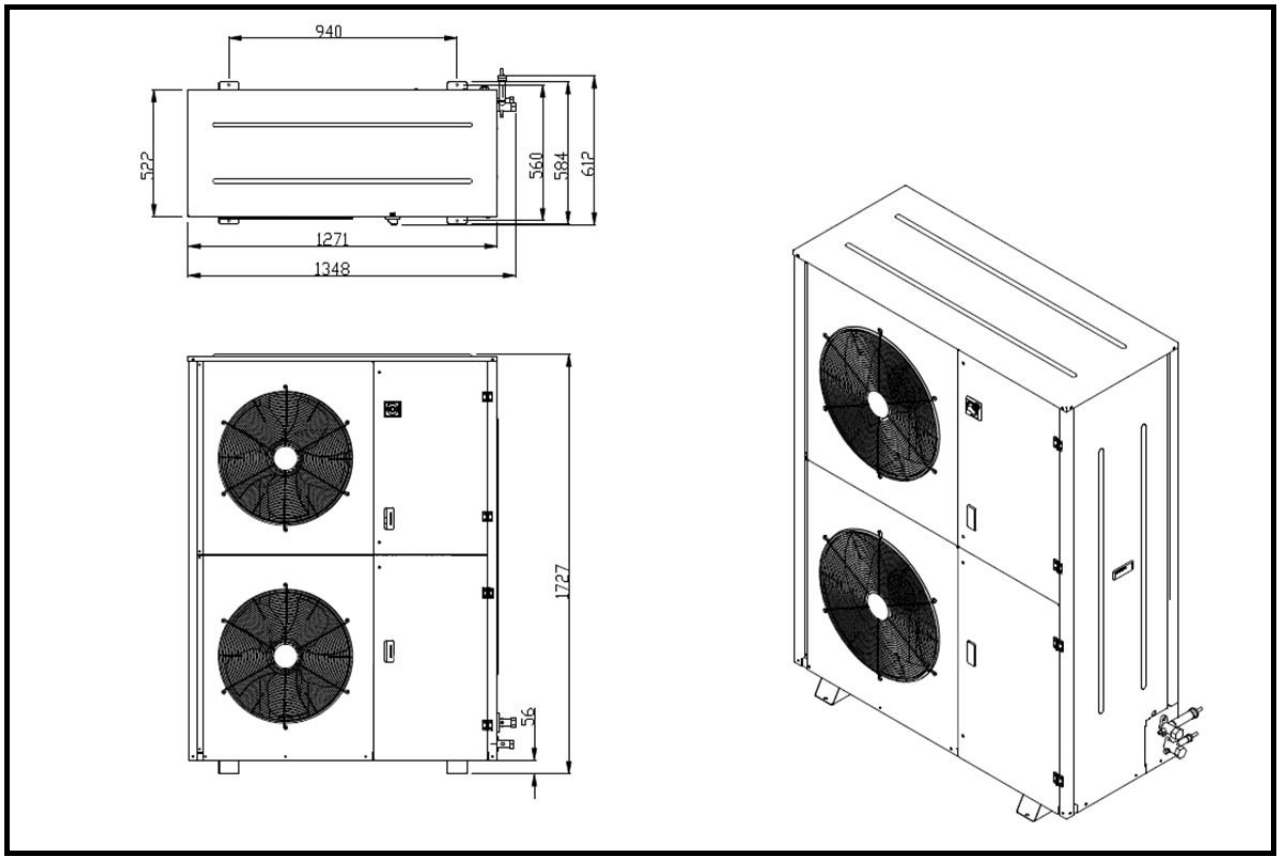

Electrical Wiring Diagram

LRMDFS0400BXY1, LRMDFS0600BXY1

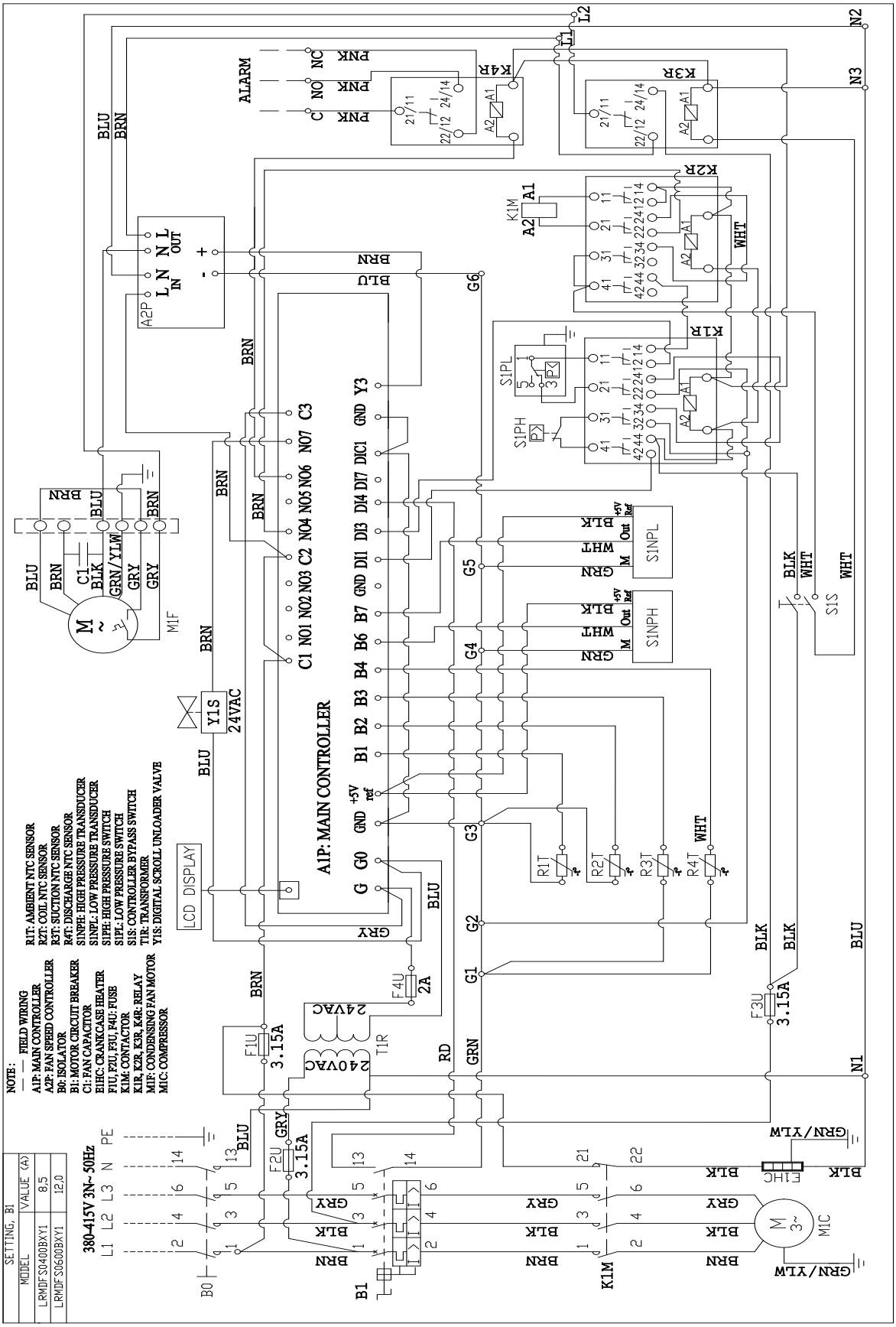

Electrical Wiring Diagram

LRMDFS0800BXY1

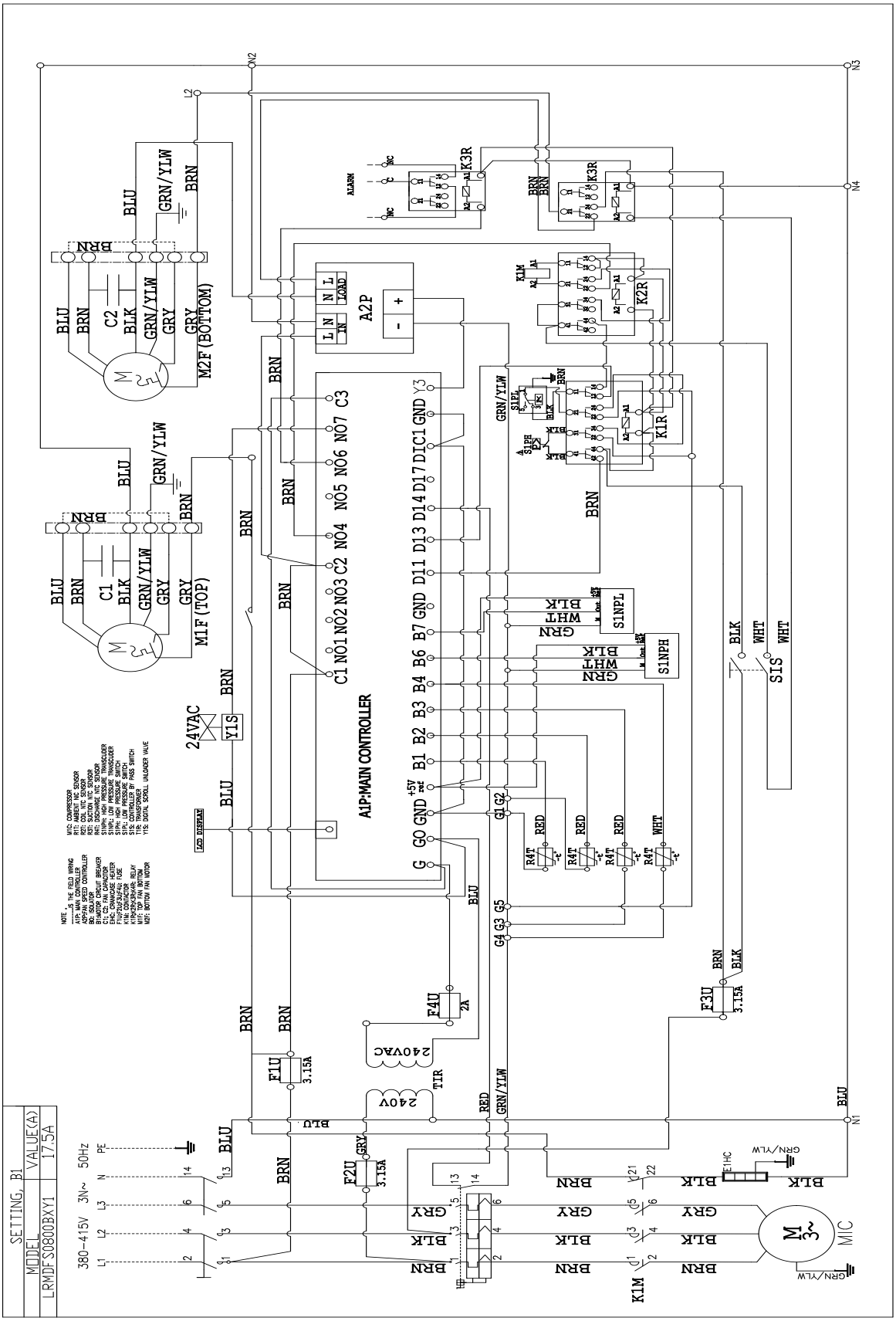

Service & Maintenance

Important Note:

Warning! – Disconnect the mains electrical supply before servicing or opening the unit.

The condensing units are designed to give long life operation with minimum maintenance. However, they should be routinely checked and the following service schedule is recommended under normal circumstances:
The removal of the top, side and front panels ensures that all parts are accessible.

1. Compressor – Inspect at regular intervals

- Check for refrigerant leaks on all joints and fittings.
- Check mountings for tightness and wear.
- Check operation of crankcase heater.
- Check electrical connections.
- Ensure that no abnormal noise or vibration is detected during test run.
- Check the compressor oil levels and top up if required. The oil level should be ½ to ¾ way up the sight glass (where fitted).

2. Condenser Fan Motor & Blade – Clean and inspect at regular intervals

- Check for abnormal noise, vibration and fan imbalance.
- Ensure that the fan motor is clean and spins freely.
- Check that the condenser fan blade is clean and free from restriction and damage/imbalance.
- **Note:** The fan motor is pre-lubricated and factory sealed so no maintenance is necessary.

3. Condenser Coil – Clean and inspect at regular intervals.

- Check and remove the dirt and debris between the fins using a soft brush, low pressure compressed air/inert gas or a low pressure sprayer utilizing clean water. A suitable chemical coil cleaner may be used as required. Accumulations of dirt on the condenser face can be removed with a soft bristle hand brush. When using liquids, ensure electrical items are isolated and correctly protected.
- DO NOT USE HIGH PRESSURE JET WASHERS.
- Check and remove any obstacles which may hinder the airflow through the condenser coil.

4. Controls

- Check settings and operation of pressure switches.
- Check overload setting.
- Check fan speed control setting and operation.

5. Power Supply – Inspect at regular intervals.

- Check the running current and voltage for the condensing unit.
- Check the electrical wiring and tighten the wires onto the terminal blocks if necessary.

6. Refrigerant Charge

- Check the refrigerant charge by ensuring that the system is operating correctly, the pressures are as expected and that the liquid line sight glass shows a full bore of liquid refrigerant.
- Carry out a full leak test.

7. Compressor replacement (rotalock connections)

- The rotalock connections as used on some compressor models are factory sealed with Loctite 554 thread sealant. If the rotalock connections need to be disassembled (e.g. compressor change), then they should be thoroughly cleaned and Loctite 554 reapplied before reassembly. In case of difficulty undoing the connections due to the sealant, apply heat to rotalock using a heat gun for several minutes and then loosen using hand tools whilst hot. Replacement of the 'O' ring seal may be required. Please refer table below for recommended torque tightening values.

Model	COMPRESSOR	Rotolock (Suction) Thread: Tightening Torque (Nm)	Rotolock (Discharge) Thread: Toghtening Torque (Nm)	Thread/Size: Tightening Torque (Nm)			
				Service Valves		Shrader Valve 1/4" SAE, Gomex Hose and HL Pressure Switch	Ball Valve
				Liquid	Suction		
				Main Cap	Main Cap	Hexagonal Cap	Main Cap
LRMDFS0400BXY1	ZBD29KQE-TFD	Not Applicable (Brazed Connection)		M18*1.0mm (25-30 Nm)	M33*1.5mm (42-47Nm)	7/16" - 20UNF (14-16 Nm)	M16*1.0mm (10-15Nm)
LRMDFS0600BXY1	ZBD45KQE-TFD						
LRMDFS0800BXY1	ZBD57KCE-TFD	1-1/4"-12UNF (110-135 Nm)		M25*1.0mm (42-47Nm)	M38*1.5mm (42-47Nm)		N/A
Remarks	-	-	-	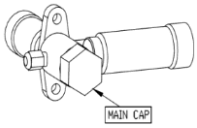		-	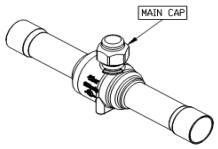

8. Unit decommissioning and disposal

- At the end of the unit's useful life, a suitably qualified engineer should decommission it. The refrigerant and compressor oil are classed as hazardous waste and as such must be reclaimed and disposed of in the correct manner, including completion of waste transfer paperwork. The unit components must be disposed of or recycled as appropriate in the correct manner.

9. Warranty

- The warranty as provided by Daikin on its products is subject to correct application, siting and installation procedures together with subsequent recorded maintenance/servicing carried out in accordance with our recommendations. Failure to do so could result in the withdrawal of our warranty. Please go to our website for our detailed warranty terms and conditions: www.daikin.com.my

F-Gas Information

From 1/1/2015, F-Gas Regulation EU 517/2014 came into force replacing the old Regulation EC 842/2006. This affects system labelling, information supplied within documentation and also the way in which thresholds for frequency of leak testing refrigeration systems are calculated. Please be aware of the following:

- The models of equipment covered in this Technical Manual rely on fluorinated greenhouse gases for their functioning.
- All unit models come from the factory pressurized with OFN (Oxygen Free Nitrogen) only.
- The GWP (Global Warming Potential) values of refrigerants which are specified for use along with the three new thresholds for leak testing requirements based on TCO_2Eq (Tonnes CO_2 Equivalent) are as follows:

		Refrigerant Charge - kg		
		5T	50T	500T
Refrigerant	GWP	CO_2Eq	CO_2Eq	CO_2Eq
R404A	3922	1.3	12.7	127
R407A	2107	2.4	23.7	237
R407F	1825	2.7	27.4	274
R448A	1387	3.6	36.0	360
R449A	1397	3.6	35.8	358

- Changes to leak testing requirements are as follows:

OLD LEGISLATION	NEW LEGISLATION	LEAK CHECKING FREQUENCY
3-30 kgs	5-50 TCO_2Eq	Every 12 months but can be increased to 24 months if fitted with a fixed leak detection system.
30-300 kgs	50-500 TCO_2Eq	Every 6 months but can be increased to 12 months if fitted with a fixed leak detection system.
300+ kgs	500+ TCO_2Eq	Every 6 months - however automatic leak detection system is mandatory which requires servicing every 12 months

To calculate TCO_2Eq value: $\frac{\text{Refrigerant charge (kgs) x Refrigerant GWP}}{1000}$

Please note: From 1st January 2017, the new legislation applies to systems which previously were exempt from leak testing under the 'below 3kg' charge limit.

A refrigerant charge label is supplied with each unit (inside the electrical box) manufactured from January 2015. The total refrigerant charge for the system and the TCO_2Eq value must be entered on the label with indelible ink and must be adhered in the proximity of the product charging port. The label supplied will represent the refrigerants approved for use with that particular unit. An example of the unit label is as follows:

Contains fluorinated greenhouse gases

Ref.	GWP	Charge (kg)	TCO_2 Eq.
R404A	3922		
R407A	2107		
R407F	1825		
R448A	1387		
R449A	1397		

Technical Information

Dual Pressure Switch

Safety pressure switch settings:
The pressure switch fitted to condensing units with auto reset for low pressure is factory preset to 1.0 bar cut-out. **Do not set pressure control below this setting.**

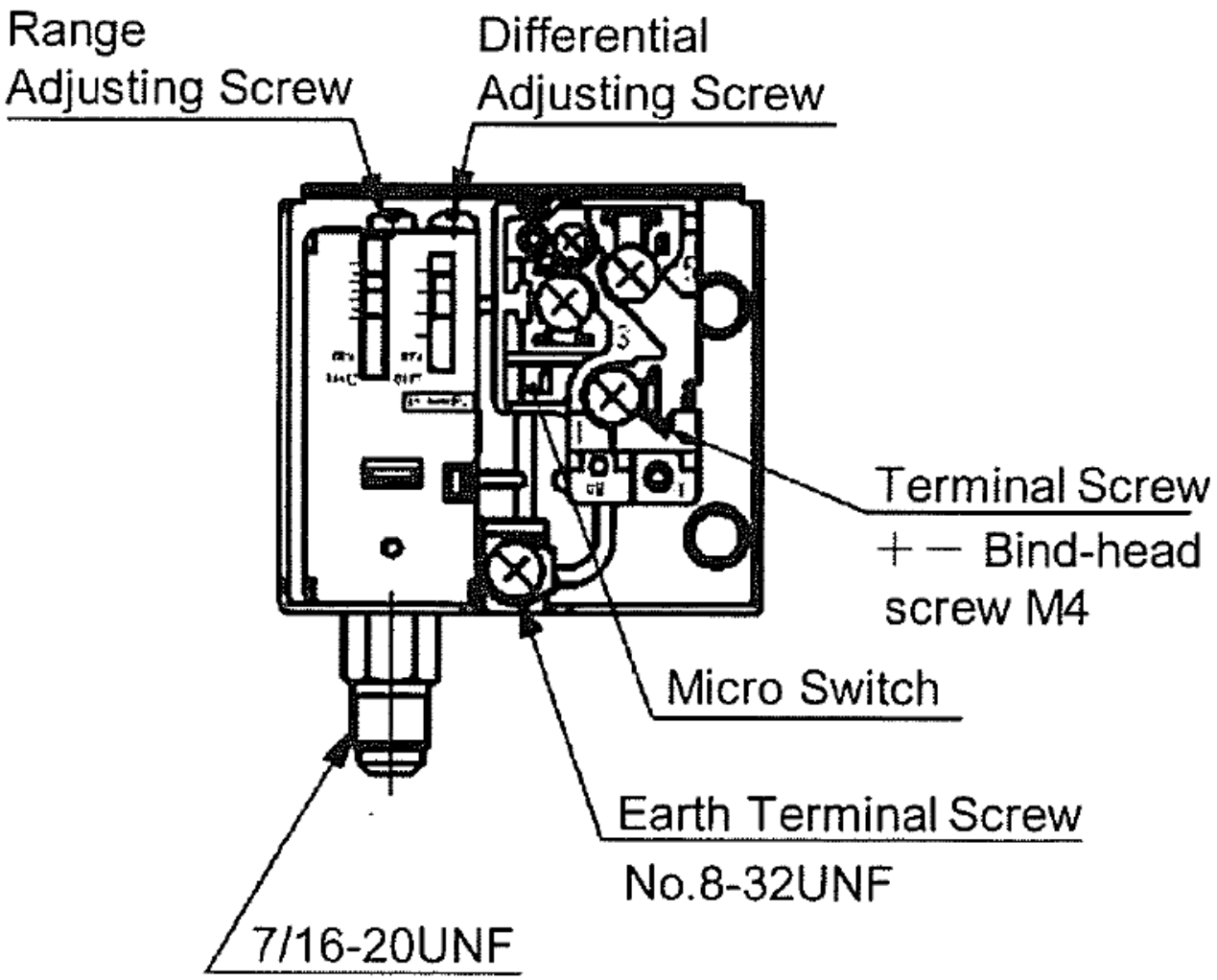

Setting procedure for Low Pressure switch

Range: Turning the range adjusting screw (2) clockwise will decrease the cut-in pressure setting. Turning the range adjusting screw anti-clockwise will increase the cut-in pressure setting.

Differential: Turning the differential adjusting screw (3) clockwise will increase the differential pressure setting. Turning the differential adjusting screw anti-clockwise will decrease the differential pressure setting.
Lock the spindle with locking plate after setting.

Technical Information

Small Version Controller

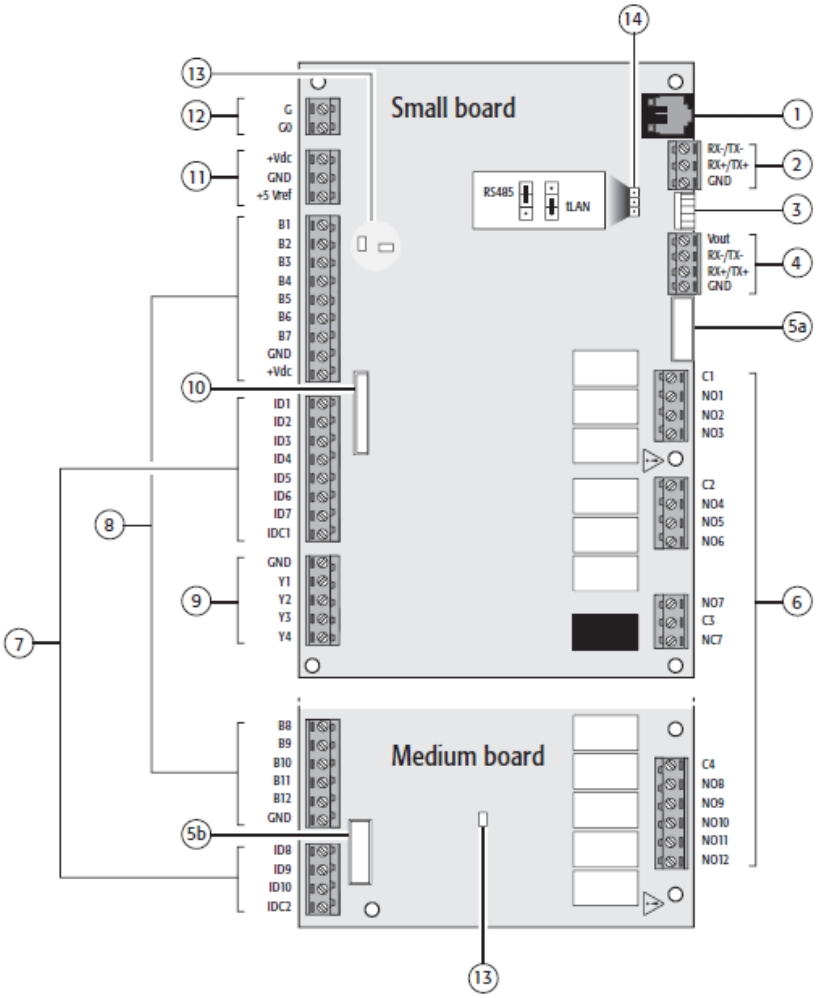

Key:

1 Terminal connector/ application download (note1)
2 µPC bus
3 PLD terminal connector (note2)
4 RS485/tLAN connection (note2)
5a Valve 1 control output
5b Valve 2 control output
6 Relay digital output
7 Digital Input
8 Probe analogue input
9 Analogue output
10 Serial card
11 Power supply for external probe
12 Power supply:
230 Vac for UPCA version
24 Vac for UPCB version
13 LED
14 tLAN/RS485 jumper

Please Note: The battery in the controller should be changed every three years.

Do not dispose of the product as municipal waste; it must be disposed of through specialist waste disposal centres.

- The product contains a battery that must be removed and separated from the rest of the product according to the instructions provided, before disposing of the product.
- Improper use or incorrect disposal of the product may negative effects on human health and on the environment.
- The public or private waste collection systems defined by local legislation must be used for disposal.
- In the event of illegal disposal of electrical and electronic waste, the penalties are specified by local waste disposal legislation.

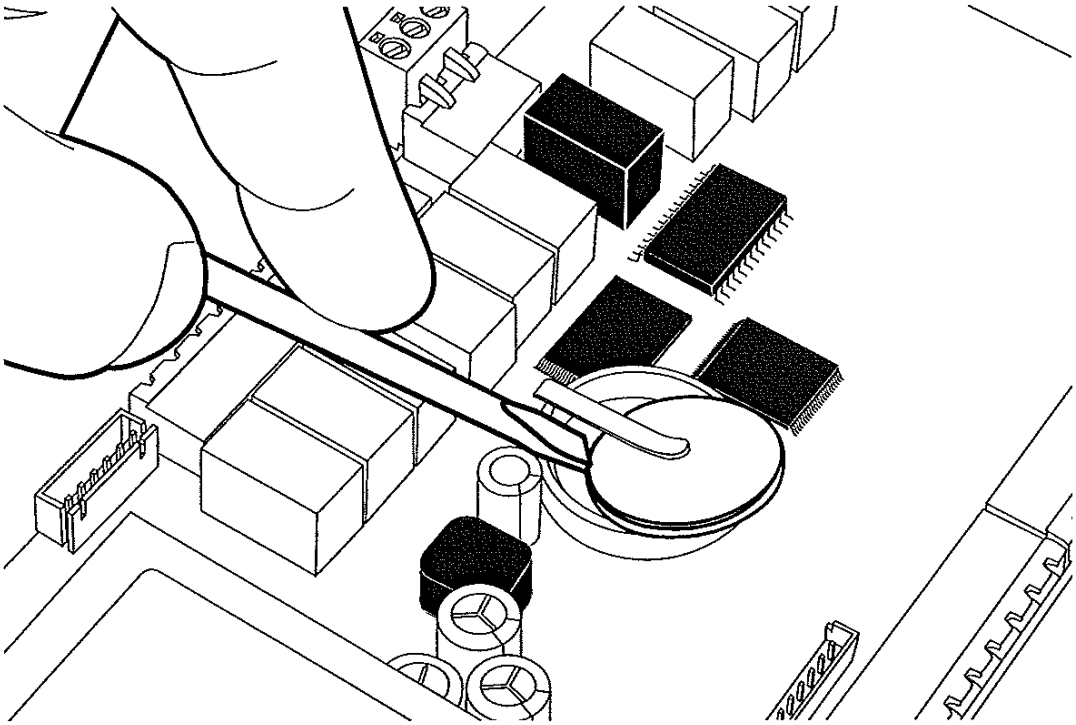

Fig. 4.c

IMPORTANT WARNINGS

The CAREL product is a state-of-the-art device, whose operation is specified in the technical documentation supplied with the product or can be downloaded, even prior to purchase, from the website www.carel.com.

The customer (manufacturer, developer or installer of the final equipment) accepts all liability and risk relating to the configuration of the product in order to reach the expected results in relation to the specific final installation and/or equipment. The failure to complete such phase, which is required/indicated in the user manual, may cause the final product to malfunction; CAREL accepts no liability in such cases. The customer must use the product only in the manner described in the documentation relating to the product. The liability of CAREL in relation to its products is specified in the CAREL general contract conditions, available on the website www.carel.com and/or by specific agreements with customers.

Technical Information

Oil Separator

Technical Data

Operating Medium	R407A/R407F/R448A/R449A
Design Pressure, DP (MPa)	3.4
Design Temperature, TS (°C)	-40 ~ 130
Maximum Allowable pressure (MPa)	3.1
Weight (kg)	3.5
Marking	CE

Type	Part No.	Connection ODF	PED Category	Volume Litres	Initial Oil Charge Litres
RSPW	55855	5/8‘‘	Cat. I	2.4	0.6
RSPW	55877	7/8‘‘	Cat. I	3.1	0.6