COMMERCIAL REFRIGERATION UNIT COOLER

MEDIUM & LOW TEMPERATURE

OPERATING AND

INSTALLATION MANUAL

TABLE OF CONTENTS

1 UNIT INFORMATION

1.1 *Nomenclature*

L F MN S 0150 A X V1

Power Supply:
V1 – 1ph/50Hz/220~240V
Y1 – 3ph/50Hz/380~415V
Production Plant
Generation:
A- 1st version
Nominal Cooling Capacity:
0150- 1.5kW
Type of Refrigerant:
P- R407C
S- R404A
Bills of Material:
MN – Medium Temperature without heater
LH – Low Temperature with heater
Unit Category:
R: Outdoor unit
F: Indoor unit
Type of product:
M:Medium temperature application
L: Low temperature application

1.2 *Product features*

- Can be used with refrigerants R404A, R134a and R410A
- DX evaporator coil, with shredder valve integrated into suction line for ease of superheat measurement
- Powder coated galvanized casing
- IP44 Axial fan with moisture proof protected and built in thermal overload.
- Up to 3 insertion slots for defrosting using electrical heaters.
- Pre-fixed wiring to fan motor

1.3 *Unit Dimension*

Model: LFMNS0150AXV1, LFMNS0400AXV1, LFLHS0150AXV1, LFLHS0200AXV1

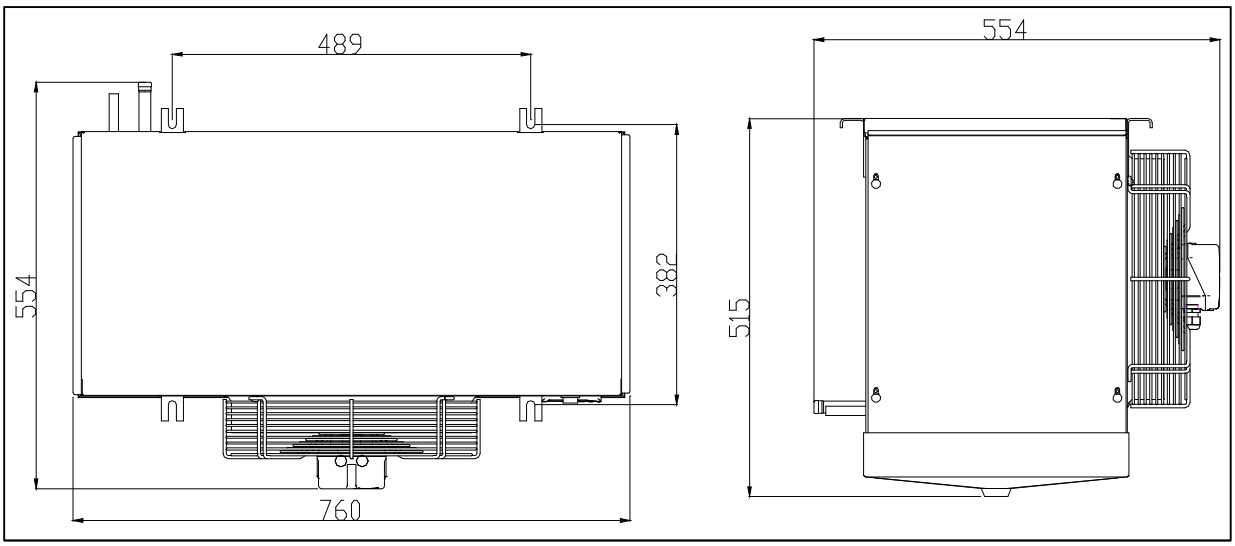

Model: LFMNS0600AXV1, LFMNS0800AXV1, LFLHS0320AXV1, LFLHS0400AXV1

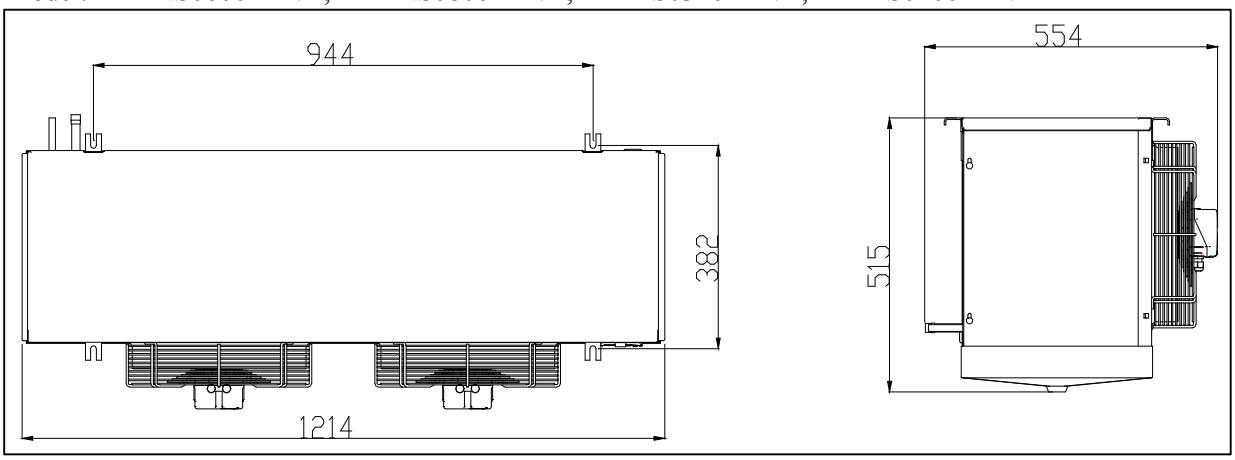

Model: LFMNS0980AXV1, LFMNS1400AXV1, LFLHS0480AXV1, LFLHS0600AXV1

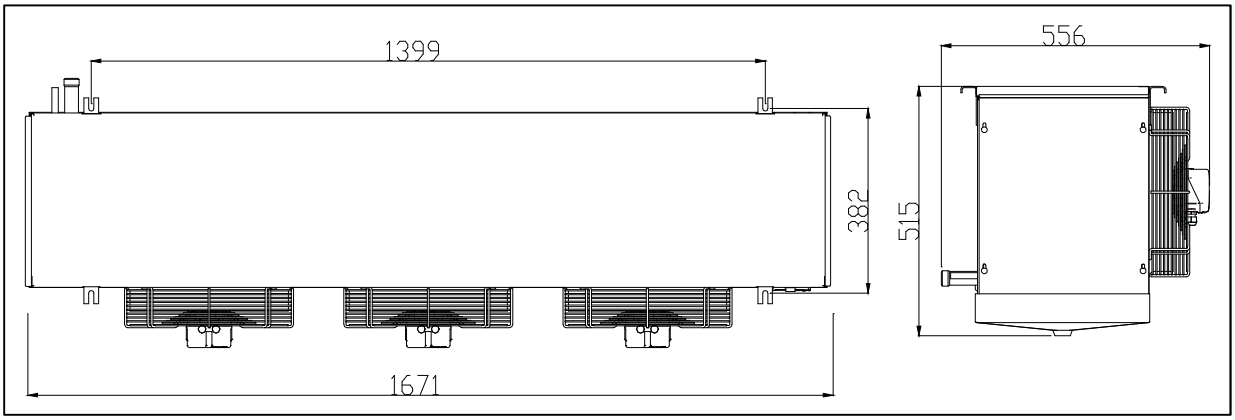

1.4 *Exploded View*

Medium Temperature Application

LFMNS0150AXV1, LFMNS0400AXV1

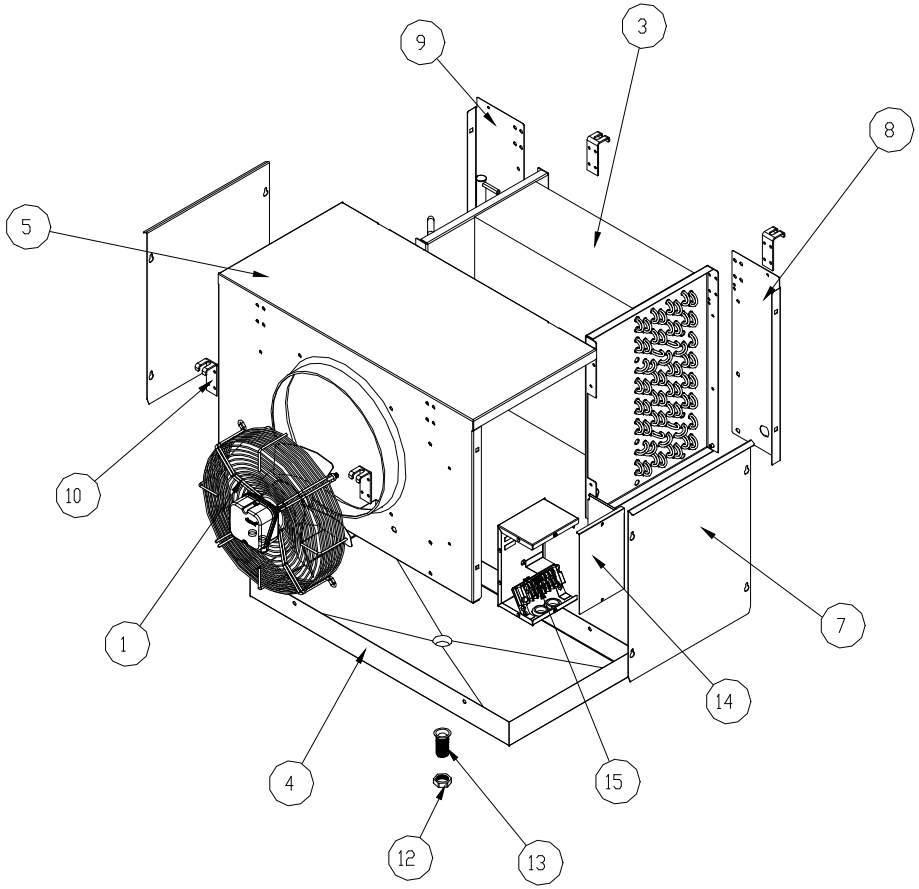

LFMNS0600AXV1, LFMNS0800AXV1

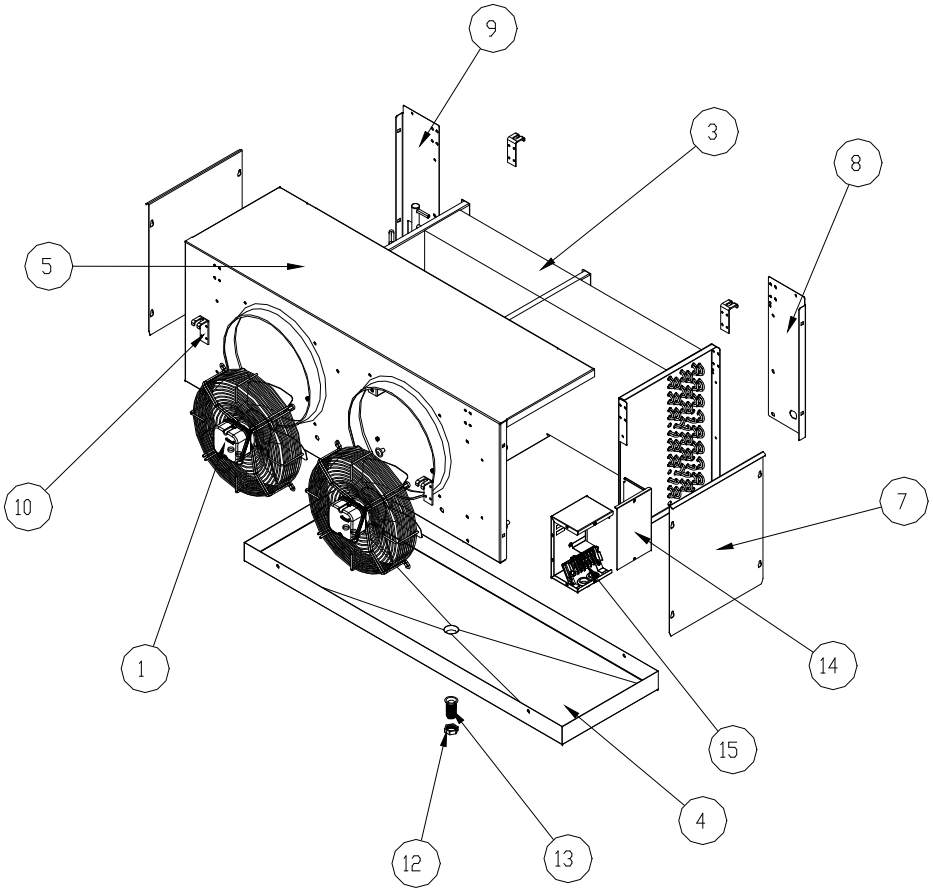

LFMNS0980AXV1, LFMNS1400AXV1

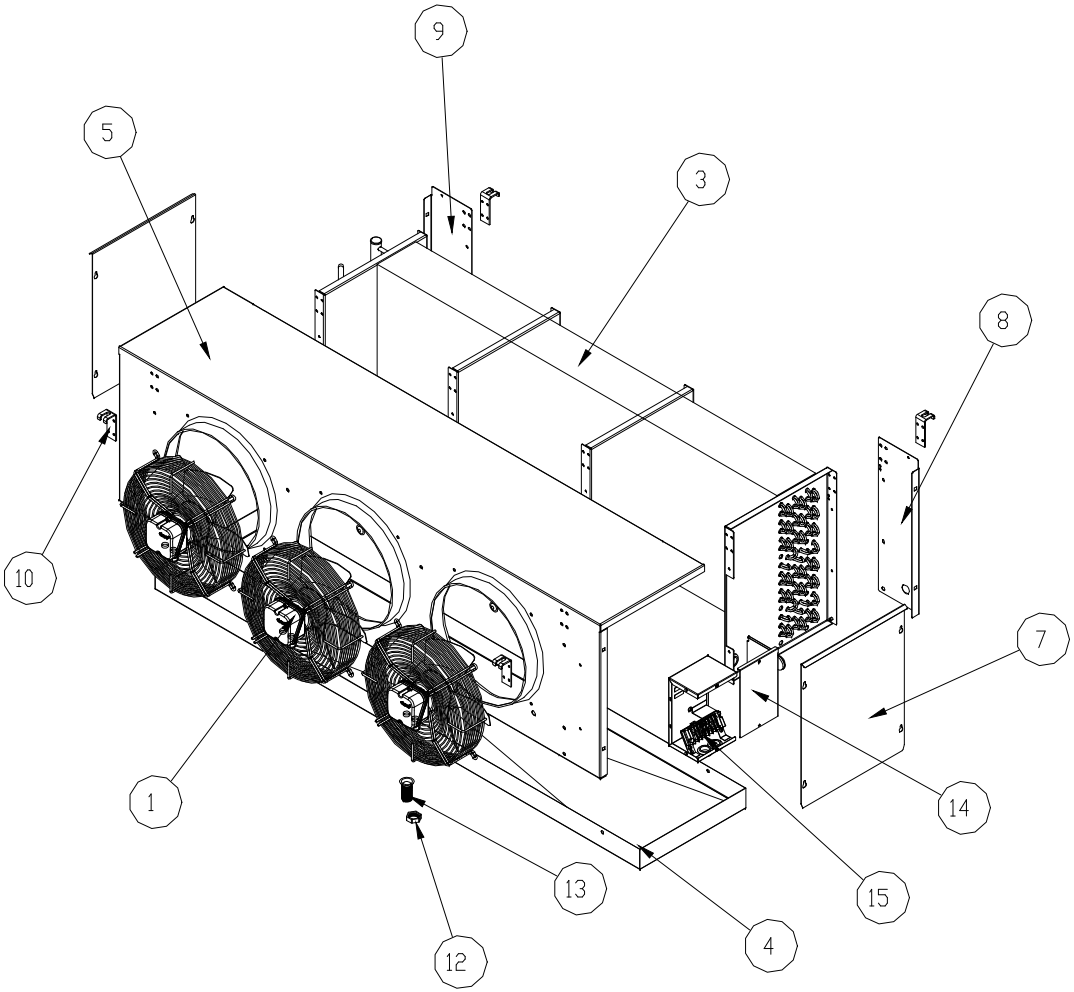

1	FAN
3	EVAPORATOR COIL
4	DRAIN PAN
5	PANEL TOP
7	PANEL SIDE
8	PANEL RIGHT
9	PANEL LEFT
10	HANGER
12	ADAPTOR
13	DRAIN PAN FITTING
14	CONTROL BOX COVER
15	TERMINAL BLOCK

Low Temperature Application

LFLHS0150AXV1, LFLHS0200AXV1

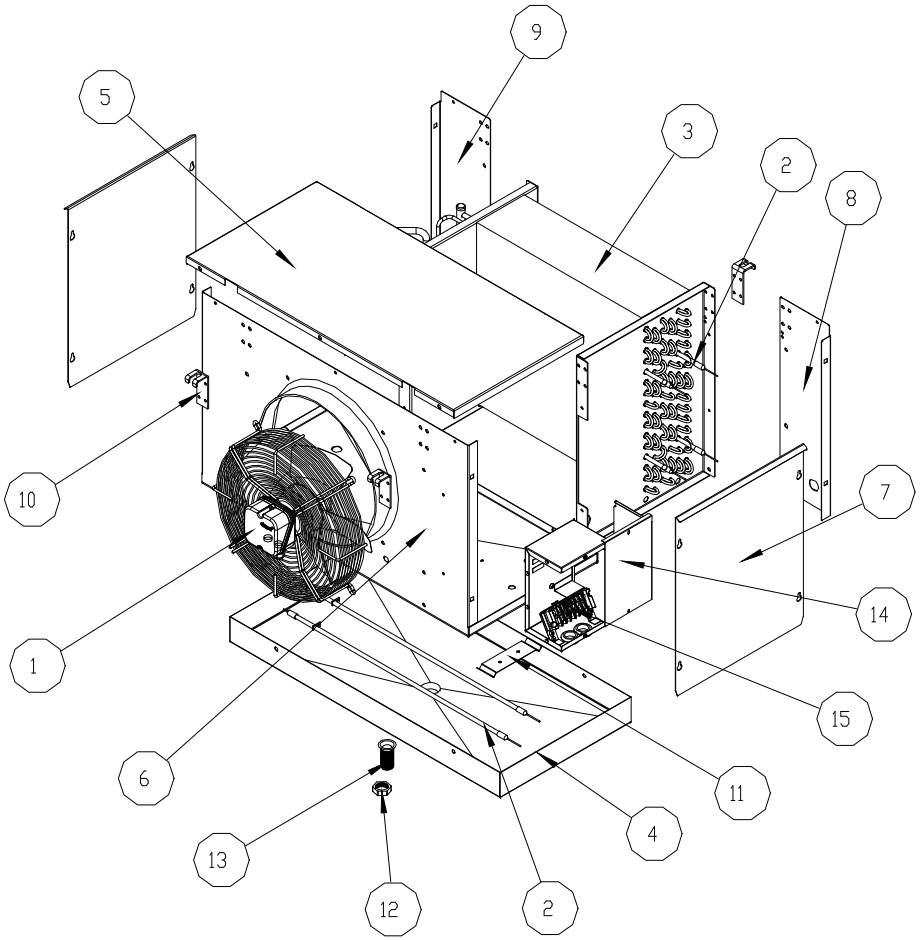

LFLHS0320AXV1, LFLHS0400AXV1

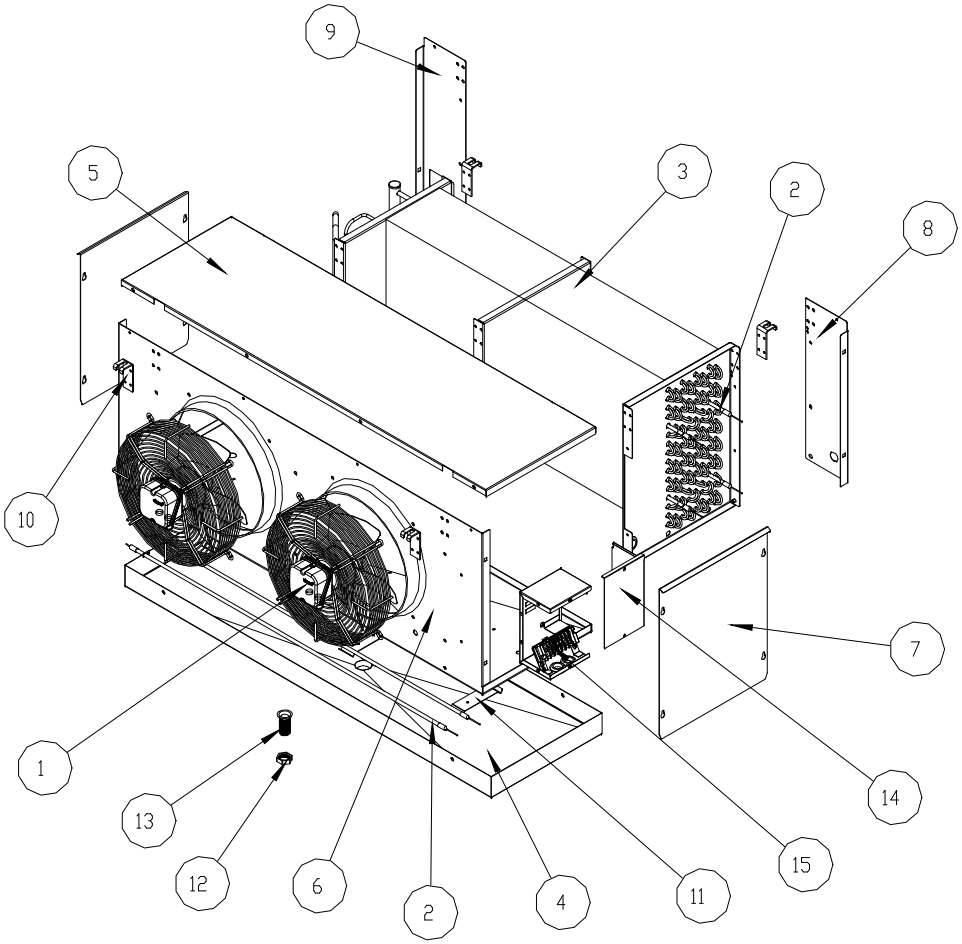

LFLHS0480AXV1, LFLHS0600AXV1

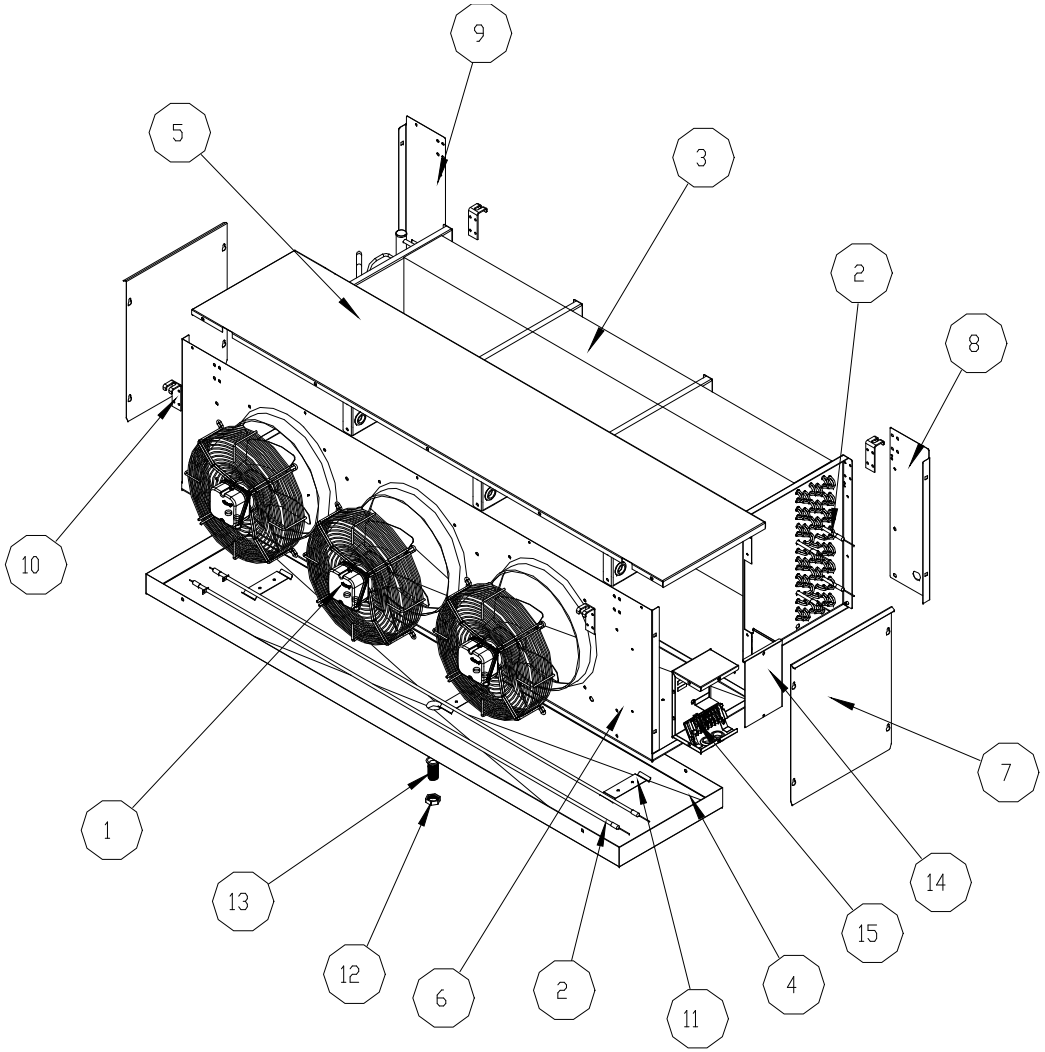

1	FAN
2	DEFROST HEATER
3	EVAPORATOR COIL
4	DRAIN PAN
5	PANEL TOP
6	PANEL FRONT
7	PANEL SIDE
8	PANEL RIGHT
9	PANEL LEFT
10	HANGER
11	HEATER CLAMP
12	ADAPTOR
13	DRAIN PAN FITTING
14	CONTROL BOX COVER
15	TERMINAL BLOCK

1.5 *General*

Upon receive of the products,

1. Please ensure:
   - The pipework should show no signs of damage
   - The fan/ fan motor terminals box is not cracked or showing signs of obvious damage
   - The electrical screw terminals in control panels and motor mountings should be checked for security.

2. Product are only suitable for fix installation.
   Product contains 4 bar±1bar holding charge (N2) when despatched from factory, the holding gas should be safely released through the schrader valve which integrated on the suction gas inlet header.

3. If the holding charge is not present, please do not use the product and contact the sales representative immediately. (Manufacturer's warranty is void for damage caused by incorrect application or unit mis-handling)

2 Health and Safety

Important Note:

Only a qualified refrigeration engineer, who is familiar with refrigeration systems and components including all controls, should perform the installation and start-up of the system. To avoid potential injury, use care when working around coil surfaces or sharp edges of metal cabinets. All piping and electrical wiring should be installed in accordance with all applicable codes, ordinances and local by-laws.

2.1 *General information*

Before Installation

- Ensure the units received are the correct models for the intended application.
- Ensure the refrigerant, voltage and MWP are all suitable for the proposed application.
- Check there is no damage to the units. Any damage should be advised to the supplier immediately.
- Check that the proposed equipment locations are suitable and provide adequate support for the weight of the units.

During Installation and subsequent maintenance

- Installation and maintenance are to be performed only by qualified personnel who are familiar with local codes and regulations, and experienced with this type of equipment.
- If lifting equipment is required, ensure that it is suitable for purpose, certificated and that the operatives are qualified to use it.
- Safe working methods are identified and operatives have suitable PPE.
- Ensure the working area has adequate ventilation during brazing procedures.
- The units contain moving machinery and electrical power hazards, which may cause severe injury or death. Disconnect and shut off power before installation or service of the equipment.
- Refrigerant release into the atmosphere is illegal. Proper evacuation, recovery, handling and leak testing procedures must be observed at all times.
- Units must be earthed and no maintenance work should be attempted prior to disconnecting the electrical supply.
- The electrical covers and fan guards must remain fitted at all times.
- Use of the units outside of the design conditions and the application for which the units were intended may be unsafe and be detrimental to the units, regardless of short or long-term operation.
- The units are not designed to withstand loads or stresses from other equipment or personnel. Such extraneous loads or stress may cause failure/leak/injury.

3 SPECIFICATION

3.1 *General*

(a) Medium Temperature

	Model	LFMNS0150AX V1	LFMNS0400AX V1	LFMNS0600AX V1	LFMNS0800AX V1	LFMNS0980AX V1	LFMNS1400AX V1
Capacity	**kW**	1.5	3.9	5.9	8.05	9.8	14.2
Sound Pressure Level	**dB(A)**	67	67	68	68	70	70
General	**Power supply (V/Ph/Hz)**	230/1/50	230/1/50	230/1/50	230/1/50	230/1/50	230/1/50
	Size L/W/H (mm/mm/mm)	760 x 554 x 515	760 x 554 x 515	1214 x 554 x 515	1214 x 554 x 515	1671 x 556 x 515	1671 x 556 x 515
	Weight (kg)	23	27	34	43	51	62
	Room Temperature (°C)	-5~15	-5~15	-5~15	-5~15	-5~15	-5~15
	Refrigerant	R404A, R134a,R410A	R404A,R134a, R410A	R404A, R134a,R410A	R404A, R134a,R410A	R404A, R134a,R410A	R404A, R134a,R410A
	Power Supply	230V/1Ph/50Hz	230V/1Ph/50Hz	230V/1Ph/50Hz	230V/1Ph/50Hz	230V/1Ph/50Hz	230V/1Ph/50Hz
	Max operating pressure (Bar)	25	25	25	25	25	25
Evaporator	**Fin spacing (FPI)**	6	6	6	6	6	6
	Coil Rows	6	8	6	8	6	8
Fan	**Fan Size (mm x Qty)**	315 x 1	315 x 1	315 x 2	315 x 2	315 x 3	315 x 3
	Air Flow (m^3/h)	1600	1500	3200	3100	4800	4700
	Fan Speed (rpm)	1350	1350	1350	1350	1350	1350
	Running current (A)	0.41	0.41	0.82	0.82	1.23	1.23
	Power Consumptions (W)	92	92	184	184	276	276
Finishing	**Casing**	Galvanized Steel (GI)	Galvanized Steel (GI)	Galvanized Steel (GI)	Galvanized Steel (GI)	Galvanized Steel (GI)	Galvanized Steel (GI)
	Color	White	White	White	White	White	White
	Packing	Carton box	Carton box	Carton box	Carton box	Carton box	Carton box
Connection Pipe Size (OD)	**Outlet (mm)**	12.7	15.88	15.88	22.22	22.22	28.56
	Inlet (mm)	12.7	12.7	12.7	12.7	12.7	15.88

* Capacity based on running condition of R404A at $T_{Air\ In}$=0°C, Evaporating temperature, T_e = -8°C. TD=8K, TD= Temperature Difference= $T_{Air\ In}$ -T_e

* Sound Pressure Level is measured at 1m away from the unit, inside Anechoic sound room.

(b) Low Temperature

	Model	LFLHS0150AX V1	LFLHS0200AX V1	LFLHS0320AX V1	LFLHS0400AX V1	LFLHS0480AX V1	LFLHS0600AX V1
Capacity	**kW**	1.5	2.0	3.2	4.0	4.8	6.0
Sound Pressure Level	**dB(A)**	67	67	68	68	70	70
General	**Power supply (V/Ph/Hz)**	230/1/50	230/1/50	230/1/50	230/1/50	230/1/50	230/1/50
	Size L/W/H (mm/mm/mm)	760 x 554 x 515	760 x 554 x 515	1214 x 554 x 515	1214 x 554 x 515	1671 x 556 x 515	1671 x 556 x 515
	Weight (kg)	23	27	34	43	51	62
	Room Temperature (^oC)	-18~5	-18~5	-18~5	-18~5	-18~5	-18~5
	Refrigerant	R404A, R410A	R404A, R410A	R404A, R410A	R404A, R410A	R404A, R410A	R404A, R410A
	Power Supply	230V/1Ph/50Hz	230V/1Ph/50Hz	230V/1Ph/50Hz	230V/1Ph/50Hz	230V/1Ph/50Hz	230V/1Ph/50Hz
	Max operating pressure (Bar)	25	25	25	25	25	25
Evaporator	**Fin spacing (FPI)**	5	5	5	5	5	5
	Coil Rows	6	8	6	8	6	8
Fan	**Fan Size (mm x Qty)**	315 x 1	315 x 1	315 x 2	315 x 2	315 x 3	315 x 3
	Air Flow (m^3/h)	1600	1500	3200	3100	4800	4700
	Fan Speed (rpm)	1350	1350	1350	1350	1350	1350
	Running current (A)	0.41	0.41	0.82	0.82	1.23	1.23
	Power Consumptions (W)	92	92	184	184	276	276
Heater	**Qty**	3	3	3	3	3	3
	Power Consumptions/ unit (W)	450	450	900	900	1350	1350
Finishing	**Casing**	Galvanized Steel (GI)	Galvanized Steel (GI)	Galvanized Steel (GI)	Galvanized Steel (GI)	Galvanized Steel (GI)	Galvanized Steel (GI)
	Color	White	White	White	White	White	White
	Packing	Carton box	Carton box	Carton box	Carton box	Carton box	Carton box
Connection Pipe Size (OD)	**Outlet (mm)**	12.7	15.88	15.88	22.22	22.22	28.56
	Inlet (mm)	12.7	12.7	12.7	12.7	12.7	15.88

* Capacity based on running condition of R404A at $T_{Air\ In}$=-18ºC, Evaporating temperature, T_e = -25ºC. TD=7K, TD= Temperature Difference= $T_{Air\ In}$ -T_e

* Sound Pressure Level is measured at 1m away from the unit, inside Anechoic sound room.

3.2 *Capacity Table*

(a) Medium Temperature

Refrigerant	R404A				
Model / Te	-10	-8	-5	0	5
LFMNS0150AXV1	1.48	**1.50**	1.54	1.66	1.79
LFMNS0400AXV1	3.85	**3.90**	4.01	4.3	4.63
LFMNS0600AXV1	5.83	**5.90**	6.07	6.58	7.05
LFMNS0800AXV1	7.95	**8.05**	8.28	8.91	9.37
LFMNS0980AXV1	9.67	**9.80**	10.07	10.71	11.16
LFMNS1400AXV1	13.94	**14.20**	14.52	15.28	15.76

Refrigerant	R134a				
Model / Te	-10	-8	-5	0	5
LFMNS0150AXV1	1.35	**1.37**	1.4	1.51	1.63
LFMNS0400AXV1	3.51	**3.55**	3.65	3.91	4.21
LFMNS0600AXV1	5.3	**5.37**	5.52	5.98	6.41
LFMNS0800AXV1	7.24	**7.33**	7.54	8.1	8.53
LFMNS0980AXV1	8.8	**8.92**	9.17	9.75	10.16
LFMNS1400AXV1	12.68	**12.92**	13.21	13.91	14.34

*DT1=8K
DT1=Air inlet temperature (Ta)- Evaporating temperature at the outlet(Te)

TD CORRECTION FACTOR

Capacity at different TD can be calculated using the correction factor given in below table:

TD(K)	4.5	5.0	5.5	6.0	6.5	7.0	7.5	8.0	8.5	9.0	9.5	10.0
Correction Factor	0.56	0.63	0.69	0.75	0.81	0.88	0.94	1.00	1.06	1.13	1.19	1.25

(b) Low Temperature

Refrigerant	R404A				
Model / Te	-40	-35	-30	-25	-20
LFLHS0150AXV1	0.81	**1.04**	1.27	1.50	1.73
LFLHS0200AXV1	1.49	**1.66**	1.83	2.00	2.17
LFLHS0320AXV1	2.21	**2.54**	2.87	3.20	3.53
LFLHS0400AXV1	2.74	**3.16**	3.58	4.00	4.42
LFLHS0480AXV1	3.27	**3.78**	4.29	4.80	5.31
LFLHS0600AXV1	4.05	**4.70**	5.35	6.00	6.65

*DT1=7K
DT1=Air inlet temperature (Ta)- Evaporating temperature at the outlet(Te)

TD CORRECTION FACTOR

TD(K)	4.5	5.0	5.5	6.0	6.5	7.0	7.5	8.0	8.5	9.0	9.5
Correction Factor	0.64	0.71	0.79	0.86	0.93	1.00	1.07	1.14	1.21	1.29	1.36

4 UNIT LOCATION AND MOUNTING

4.1 *Unit Location*

Unit coolers must be located at places that provide good air circulation; otherwise the performances of the unit cooler could be compromised. For best performance it is desirable to arrange the air discharge blowing toward the door to minimize the entrance of warm moist air when door is open. Light fixtures, shelving and product boxes must be located in a manner whereby they do not block the air intake and air discharge from the unit cooler.

Side clearance should be reserved so that service work can be carried out.

IMPORTANT:
The coil face must be located a minimum of 0.6xH" from walls to assure unrestricted air intake.

4.2 *Mounting*

Daikin unit coolers come with mounting holes that can be fixed with the use of M8 or M10 bolts and nuts. The unit must be installed in a level manner, to ensure water condensation can be properly drain out.

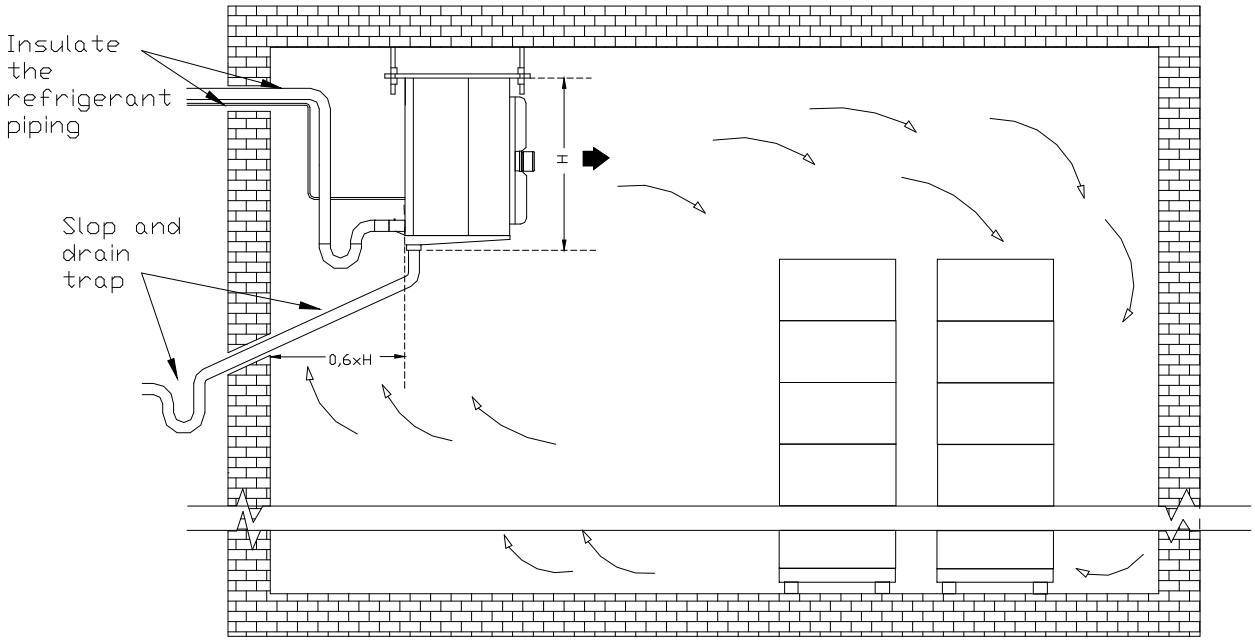

5 PIPING INSTALLATION

5.1 *Refrigerant pipe connection*

Refrigerant pipe connections should be installed in accordance with all the applicable codes and using good refrigeration practices. Suction lines should be properly insulated to prevent sweating and ensure only superheated vapor is returned to compressor suction. During brazing, the system should be purged with nitrogen first, to prevent oxidation.

5.2 *Vacuum and leak test*

When all refrigeration piping connections had been completed, the entire system must be tested for leaks and then vacuum. Refer to the instruction manual provided by the coupled condensing unit for the leak test and vacuum test information.

5.3 *Drain pipe*

Installing a trap is required for trouble free operation. If unit cooler is operated without the drain trap, warm air with higher temperature will draw from outside to the cold room. Thus warm air will significantly reduce the cooler capacity and may lead to ice formation in the drain pan.

If the temperature surrounding the drain line and trap is below freezing ($0^{o}C$), it must be wrapped with a drain line heater and insulation until out of wall of the cool room. Be sure to wrap the drain pan coupling too.

Make sure the drain line is clear to prevent drain line plugged and overflow.

5.4 Superheat

Check suction superheat and adjust expansion valve to prevent liquid flood back to the compressor. Recommended 5K to 20 K for suction superheat.

**Remarks: Expansion valve is not factory pre-fitted.

6 ELECTRICAL

6.1 *Field wiring*

Field wiring should comply with local codes. The power supply voltage, phase and frequency must match what is shown on the unit cooler data plate.
The wiring diagram for each unit is located on the inside of the panel door of the control box. The unit must be grounded.

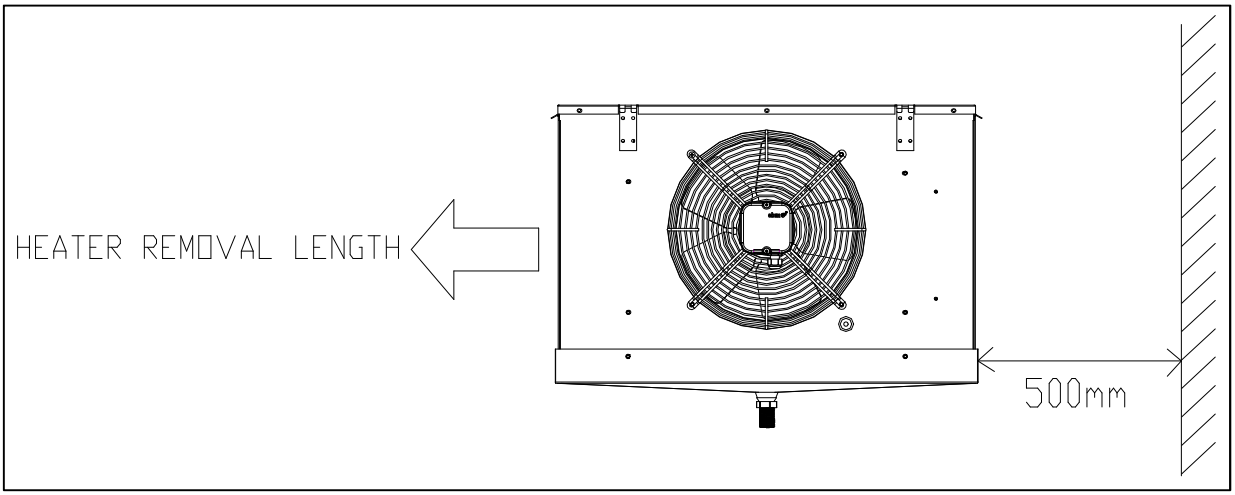

Model	Heater Removal Length (mm)
LFMNS0150AXV1 LFMNS0400AXV1 LFLHS0150AXV1 LFLHS0200AXV1	800
LFMNS0600AXV1 LFMNS0800AXV1 LFLHS0320AXV1 LFLHS0400AXV1	1350
LFMNS0980AXV1 LFMNS1400AXV1 LFLHS0480AXV1 LFLHS0600AXV1	1750

The diagram and table above showed the required length to reserve for heater removal and access to control box for servicing purpose.

6.2 *Earth Wiring*

Units must be earthed and no maintenance work should be attempted prior to disconnecting the electrical supply. Installation of earth wire should be made to earth screw before connecting the live wires. The earth wire shall be slacked with longer length as shown in below diagram.

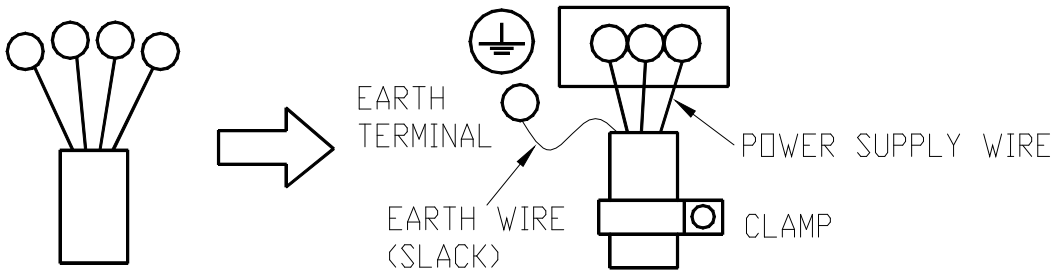

WARNING

Please check electrical safety (leakage current, withstand voltage, earth continuity) after connected to heaters, fuse, and timers.

6.3 Wiring Diagram

REMARK: Heater is only provided for low temperature model only.

(a) LFMNS0150AXV1; LFMNS0400AXV1; LFLHS0150AXV1; LFLHS0200AXV1

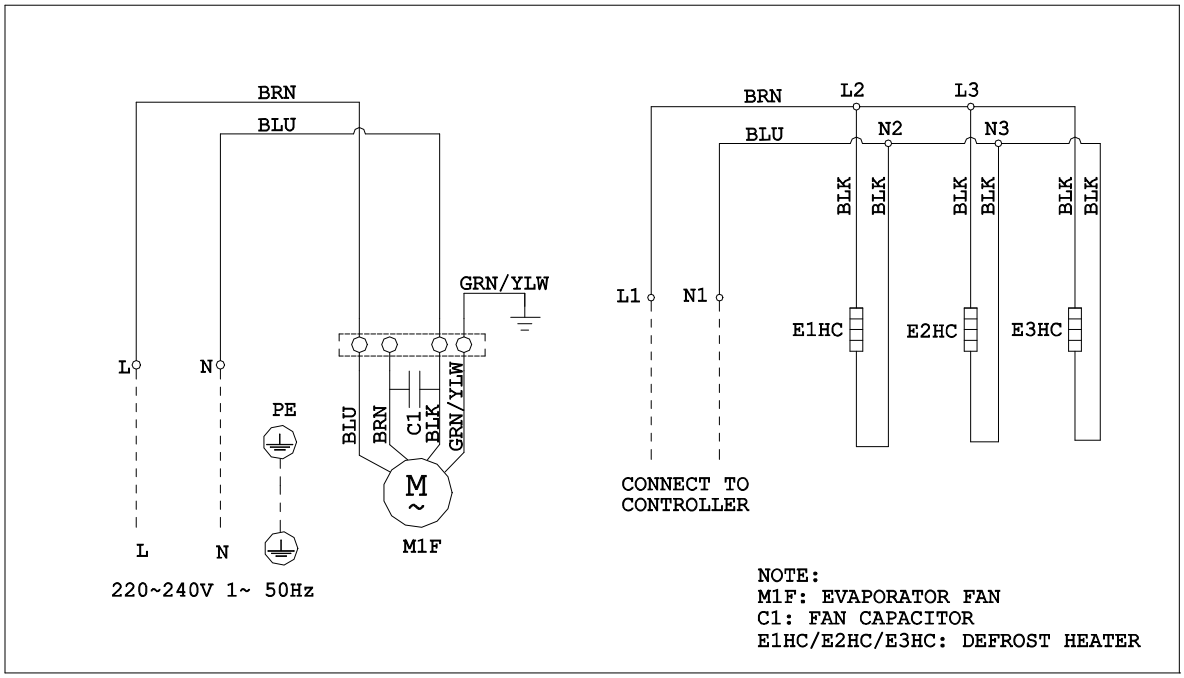

(b) LFMNS0600AXV1; LFMNS0800AXV1; LFLHS0320AXV1; LFLHS0400AXV1

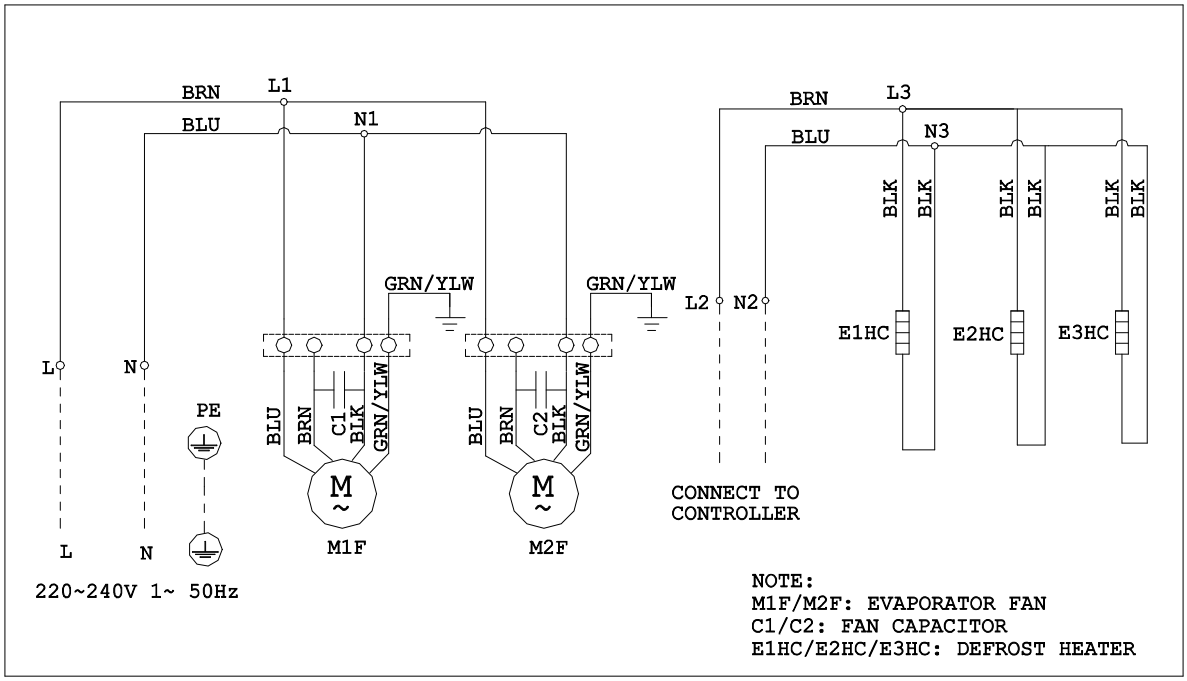

(c) LFMNS0980AXV1; LFMNS1400AXV1; LFLHS0480AXV1; LFLHS0600AXV1

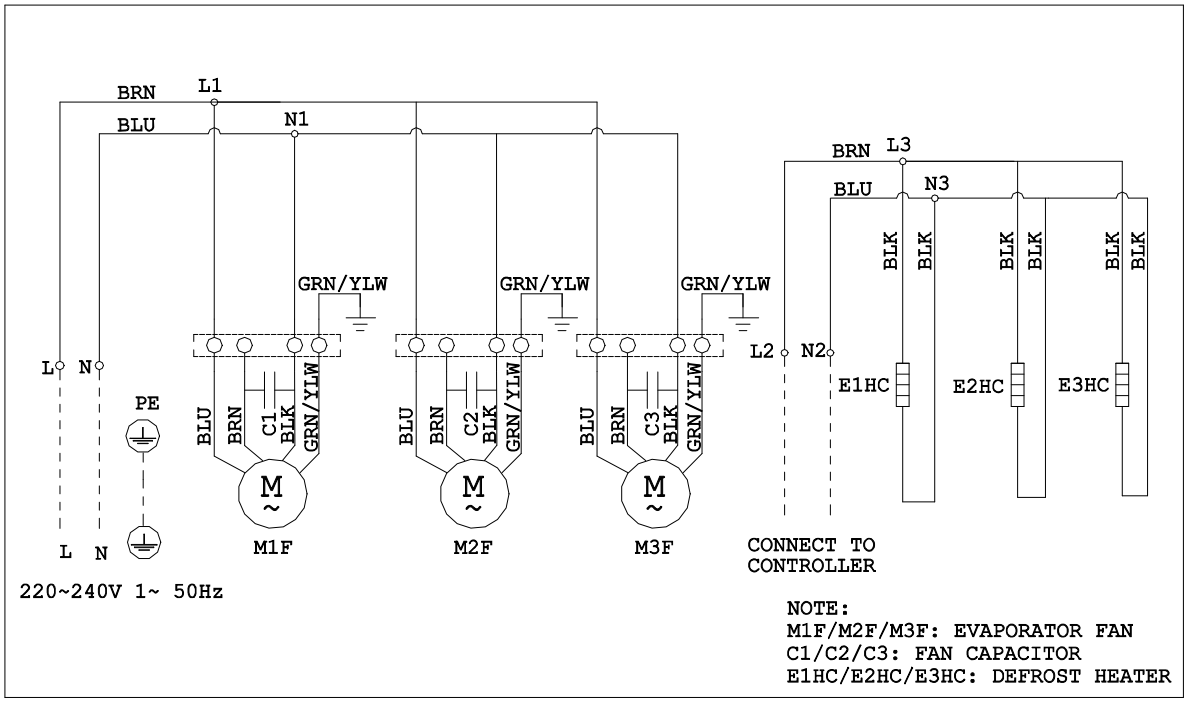

7 START UP

7.1 *Pre-start up*

After the installation is completed, a review of the following items should be performed before the system is placed into operation:

Check electrical connections, fan motors, grills and all other fasteners for tightness. Be sure the thermostatic expansion valve bulb is properly located, strapped and insulated.

With the system operating, check the supply voltage. It must be within +/- 10% of the voltage marked on the unit nameplate.

7.2 *Operation Checkout*

A defrost cycle is needed when the frost build up is such that is impedes the airflow through the coil. The defrost requirements will vary on each installation and may change depending on the time of the year and other conditions.

WARNING

Please be aware that during electric defrost; the temperature of surrounding may rise dramatically. Kindly keep a safety distance away from the unit.

Check the drain line and make sure drain line is clear and unit is aligned in all position to avoid overflow of condensation water.

8 PREVENTATIVE MAINTENANCE

A preventative maintenance schedule should be set up as soon as the Unit Cooler is installed. The unit should be inspected periodically for proper operation and buildup of dirt.

1. Inspect and clean the drain pan to ensure there is no blockage. The drain pan should be cleaned regularly with warm water and neutral detergent.

WARNING: All power must be disconnected before cleaning.

2. The cabinet, fans and guards can be cleaned with water and neutral detergent. Do not clean using water jet.

3. The evaporator coil should be checked once a month for proper defrosting. Many variables affect coil frosting such as room temperature, type of product being stored, how often new product is brought in and the length of time the door to the room remains open. Summer conditions of high humidity can cause heavier frost loads. It may be necessary to change the numbers of defrost cycles seasonally.

4. At least every six months check all fan motors. Tighten motor mounting screws and fan set screws.

9 TROUBLESHOOTING CHART

Table 1: **TROUBLESHOOTING CHART**

PROBLEM	POSSIBLE CAUSES	CORRECTIVE ACTION
Excessive buildup of frost on coil.	Defrost time is too short. Too high humidity in room. Heater capacity is too small.	Extend defrost time on timer. Limit access to cooler; do not keep doors open during stocking. Change to bigger capacity or add more heater.
Accumulation of ice or water in drain pan.	Drain line plugged. Drain pipe does not have slope angle. Indoor unit not align or install in level at all directions. Drain line does not have drain trap	Clean drain line. Make sure drain line is insulated properly. Install the drain line with slope Check unit installation and align the unit level at all directions. Install drain line trap.
Noise	Resonance on the vibrating mounting parts. Vibration of fan or fan mounting misaligned.	Fix the position of vibrating part correctly. Fix the position of fan correctly; replace if defective.
Room temperature too high/ not cold	Room thermostat defect. Insufficient or no refrigerant supply to evaporator Frost build up on evaporator coil Defrosting too frequent Wrong combination of unit: -Unit cooler is too big against to outdoor unit -Unit cooler is too small against to cooling load	Check thermostat setting and replace if any. Check sensor location Investigate cause (leakage, choking, etc.), repair fault and charge system if necessary. Defrost the coil and clean the frost. Reduce defrost cycle frequency. Review and reselect the unit combination.